SECTION BR
BRAKE SYSTEM

CONTENTS

PRECAUTION 3

PRECAUTIONS 3
- Precaution for Supplemental Restraint System (SRS) "AIR BAG" and "SEAT BELT PRE-TENSIONER" 3
- Precaution for Procedure without Cowl Top Cover 3
- Precaution for Brake System 3

PREPARATION 5

PREPARATION 5
- Special Service Tool 5
- Commercial Service Tool 5

SYMPTOM DIAGNOSIS 7

NOISE, VIBRATION AND HARSHNESS (NVH) TROUBLESHOOTING 7
- NVH Troubleshooting Chart 7

PERIODIC MAINTENANCE 8

BRAKE PEDAL 8
- Inspection and Adjustment 8

BRAKE FLUID 11
- Inspection 11
- Draining 11
- Refilling 11
- Bleeding Brake System 12

BRAKE MASTER CYLINDER 13
- Inspection 13

BRAKE BOOSTER 14
- Inspection 14

FRONT DISC BRAKE 15

BRAKE PAD 15
- BRAKE PAD : Inspection 15
- BRAKE PAD : Brake Burnishing 15

DISC ROTOR 15
- DISC ROTOR : Inspection 15

REAR DRUM BRAKE 17

BRAKE LINING 17
- BRAKE LINING : Inspection 17
- BRAKE LINING : Brake Burnishing 17

BRAKE DRUM 17
- BRAKE DRUM : Inspection 17

REMOVAL AND INSTALLATION 19

BRAKE PEDAL 19
- Exploded View 19
- Removal and Installation 19
- Inspection and Adjustment 20

BRAKE PIPING 21

FRONT 21
- FRONT : Exploded View 21
- FRONT : Hydraulic Piping 22
- FRONT : Removal and Installation 22
- FRONT : Inspection 23

REAR 23
- REAR : Exploded View 24
- REAR : Hydraulic Piping 24
- REAR : Removal and Installation 25
- REAR : Inspection 25

BRAKE MASTER CYLINDER 27
- Exploded View 27
- Removal and Installation 27
- Disassembly and Assembly 28
- Inspection 28

BRAKE BOOSTER AND CHECK VALVE 30
- Exploded View 30
- Removal and installation 30
- Inspection and Adjustment 31

VACUUM LINES **32**
Exploded View 32
Removal and Installation 32
Inspection 32

FRONT DISC BRAKE **34**

BRAKE PAD **34**
BRAKE PAD : Exploded View 34
BRAKE PAD : Removal and Installation 34
BRAKE PAD : Inspection 35

BRAKE CALIPER ASSEMBLY **35**
BRAKE CALIPER ASSEMBLY : Exploded View ... 35
BRAKE CALIPER ASSEMBLY : Removal and Installation 36
BRAKE CALIPER ASSEMBLY : Disassembly and Assembly 37

REAR DRUM BRAKE **40**
Exploded View 40
Removal and Installation 40
Disassembly and Assembly 42
Inspection and Adjustment 42

SERVICE DATA AND SPECIFICATIONS (SDS) **44**

SERVICE DATA AND SPECIFICATIONS (SDS) **44**
General Specifications 44
Brake Pedal 44
Check Valve 44
Brake Booster 44
Front Disc Brake 44
Rear Drum Brake 45

PRECAUTION

PRECAUTIONS

Precaution for Supplemental Restraint System (SRS) "AIR BAG" and "SEAT BELT PRE-TENSIONER"

INFOID:0000000009578745

The Supplemental Restraint System such as “AIR BAG” and “SEAT BELT PRE-TENSIONER”, used along with a front seat belt, helps to reduce the risk or severity of injury to the driver and front passenger for certain types of collision. Information necessary to service the system safely is included in the SR and SB section of this Service Manual.

WARNING:

- **To avoid rendering the SRS inoperative, which could increase the risk of personal injury or death in the event of a collision which would result in air bag inflation, all maintenance must be performed by an authorized NISSAN/INFINITI dealer.**
- **Improper maintenance, including incorrect removal and installation of the SRS, can lead to personal injury caused by unintentional activation of the system. For removal of Spiral Cable and Air Bag Module, see the SR section.**
- **Do not use electrical test equipment on any circuit related to the SRS unless instructed to in this Service Manual. SRS wiring harnesses can be identified by yellow and/or orange harnesses or harness connectors.**

PRECAUTIONS WHEN USING POWER TOOLS (AIR OR ELECTRIC) AND HAMMERS

WARNING:

- **When working near the Airbag Diagnosis Sensor Unit or other Airbag System sensors with the Ignition ON or engine running, DO NOT use air or electric power tools or strike near the sensor(s) with a hammer. Heavy vibration could activate the sensor(s) and deploy the air bag(s), possibly causing serious injury.**
- **When using air or electric power tools or hammers, always switch the Ignition OFF, disconnect the battery and wait at least three minutes before performing any service.**

Precaution for Procedure without Cowl Top Cover

INFOID:0000000009364814

When performing the procedure after removing cowl top cover, cover the lower end of windshield with urethane, etc. to prevent damage to windshield.

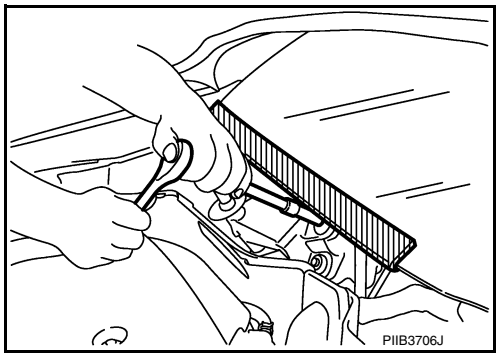

Precaution for Brake System

INFOID:0000000009364815

WARNING:

Clean any dust from the front brake and rear brake with a vacuum dust collector. Do not blow with compressed air.

- Brake fluid use refer to MA-11, "Fluids and Lubricants".
- Do not reuse drained brake fluid.
- Do not spill or splash brake fluid on painted surfaces. Brake fluid may seriously damage paint. Wipe it off immediately and wash with water if it gets on a painted surface.
- Always confirm the specified tightening torque when installing the brake pipes.
- After pressing the brake pedal more deeply or harder than normal driving, such as air bleeding, inspect the brake pedal height and play. Adjust brake pedal if it is outside the standard value.
- Always clean with new brake fluid when cleaning the brake caliper and other components.
- Do not use mineral oils such as gasoline or light oil to clean. They may damage rubber parts and cause improper operation.

- Always loosen the brake tube flare nut with a flare nut wrench.
- Tighten the brake tube flare nut to the specified torque with a crow-foot (A) and torque wrench (B).
- Brake system is an important safety part. If a brake fluid leak is detected, always disassemble the affected part. If a malfunction is detected, replace part with a new one.
- Always connect the battery terminals when moving the vehicle.
- Check that no brake fluid leakage is present after replacing the parts.
- Burnish the brake contact surfaces after refinishing or replacing disc brake rotors, after replacing brake pads, or if a soft pedal occurs at very low mileage.

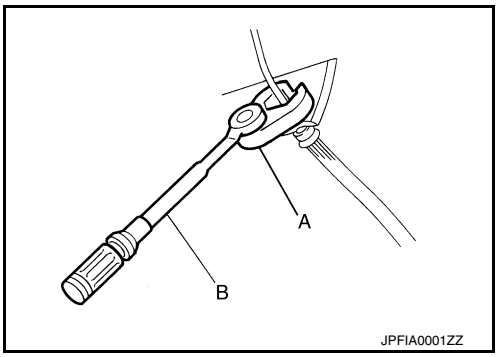

- Front brake pad: Refer to BR-15, "BRAKE PAD : Inspection".
- Front disc brake rotor: Refer to BR-15, "DISC ROTOR : Inspection".
- Rear brake lining: refer to BR-17, "BRAKE LINING : Inspection".
- Rear brake drum: BR-17, "BRAKE DRUM : Inspection".

PREPARATION

PREPARATION

Special Service Tool

INFOID:0000000009364816

The actual shapes of Kent-Moore tools may differ from those of special service tools illustrated here.

Tool number (Kent-Moore No.) Tool name	Description
— (J-46532) Brake height tool 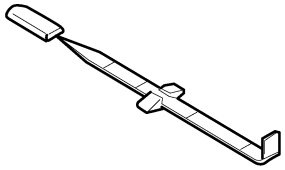 LFIA0227E	Measuring brake pedal height
38-PFM92-GYX/5 (—) On-car brake lathe 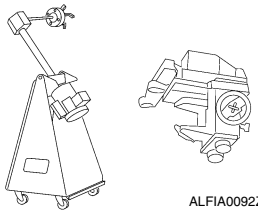 ALFIA0092ZZ	Turning disc brake rotors

Commercial Service Tool

INFOID:0000000009364817

Tool name	Description
1. Flare nut crowfoot 2. Torque wrench 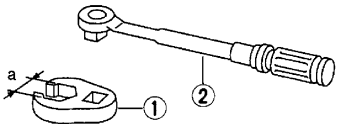 NT360	Removing and installing brake pipe and hose flare nuts a:10 mm (0.39 in) / 12 mm (0.47 in)
Vacuum pump ZZC1313D	• Air tight • Inspection of check valve

Tool name	Description
Brake caliper wrench (front) 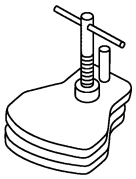 NNFIA0040ZZ	Return the piston
Power tool 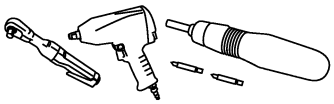 PIIB1407E	Loosening nuts, screws and bolts

SYMPTOM DIAGNOSIS

NOISE, VIBRATION AND HARSHNESS (NVH) TROUBLESHOOTING

NVH Troubleshooting Chart

INFOID:0000000009364818

Use the chart below to find the cause of the symptom. If necessary, repair or replace these parts.

Reference page			BR-15, BR-17	BR-15, BR-17	BR-15	BR-15	BR-15, BR-17	BR-15	BR-15	BR-15, BR-17	BR-15, BR-17	BR-15	BR-17	FAX-6 (front axle) RAX-4 (rear axle) FSU-5 (front suspension) RSU-4 (rear suspension)	WT-40 (wheel and tire)	WT-40 (wheel and tire)	FAX-6 (front axle)	ST-7 (steering system)
Possible cause and SUSPECTED PARTS			Pads or lining damaged	Pads or lining uneven wear	Shims damaged	Rotor imbalance	Rotor or drum damage	Rotor runout	Rotor deformation	Rotor or drum deflection	Rotor or drum rust	Rotor thickness variation	Drum out of round	AXLE AND SUSPENSION	TIRE	ROAD WHEEL	DRIVE SHAFT	STEERING
Symptom	BRAKE	Noise	×	×	×						×			×	×	×	×	×
		Shake				×								×	×	×	×	×
		Shimmy, Shudder				×	×	×	×	×	×	×	×	×	×	×		×

×: Applicable

PERIODIC MAINTENANCE

BRAKE PEDAL

Inspection and Adjustment

INFOID:0000000009364819

INSPECTION

Brake Pedal Height

Check the height (H_1) between the dash lower panel (1) and the brake pedal upper surface.

Brake pedal height : Refer to BR-44, "Brake Pedal".

CAUTION:
Remove the floor trim.

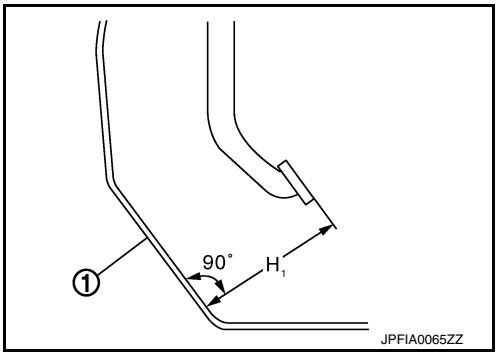

Stop Lamp Switch

Check the clearance (C) between the brake pedal (1) and the stop lamp switch (2) threaded end.

Clearance : Refer to BR-44, "Brake Pedal".

CAUTION:
The stop lamp must turn off when the brake pedal is released.

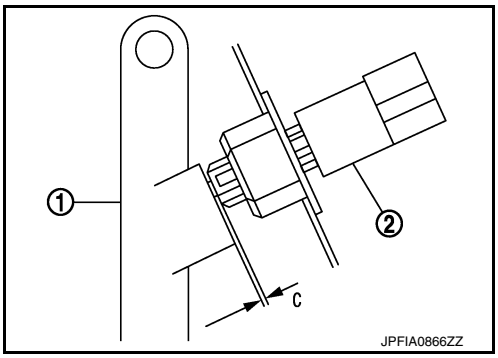

ASCD Cancel Switch (if equipped)

Check the clearance (C) between the brake pedal (1) and the ASCD cancel switch (2) threaded end.

Clearance : Refer to BR-44, "Brake Pedal".

CAUTION:
The stop lamp must turn off when the brake pedal is released.

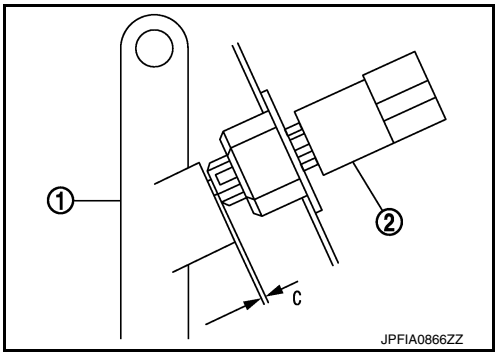

Brake Pedal Play

Press the brake pedal. Check that brake pedal play does not exist.

Depressed Brake Pedal Height

Check the height between the dash lower panel (1) and the brake pedal upper surface (H_2) when depressing the brake pedal at 490 N (50.0 kg-f, 110.2 lb-f) while turning engine ON.

Depressed brake pedal height : **Refer to BR-44, "Brake Pedal".**

CAUTION:
Remove the floor trim.

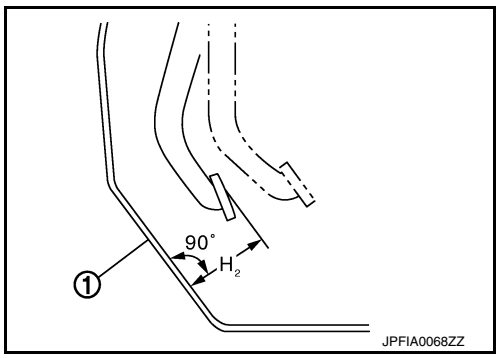

ADJUSTMENT

Brake Pedal Height

1. Remove instrument lower panel LH. Refer to IP-24, "Removal and Installation".
2. Disconnect the harness connector from stop lamp switch.
3. Loosen the stop lamp switch 45° counterclockwise.
4. Adjust the brake pedal height with the following procedure.

a. Loosen the input rod lock nut (1).
CAUTION:
The threaded end of the input rod (2) must project to the inner side (L) of the clevis (3).

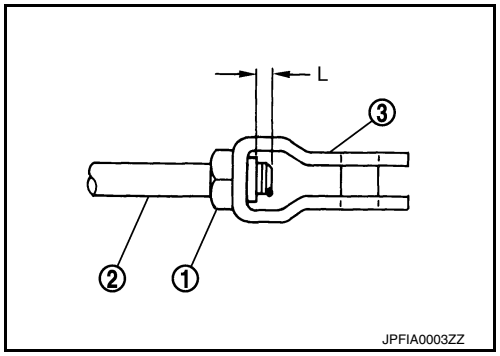

b. Rotate the input rod, adjust the brake pedal to the specified height (H_1).

Brake pedal height : **Refer to BR-44, "Brake Pedal".**

c. Tighten the lock nut. Refer to BR-30, "Exploded View".
5. Check the brake pedal play.

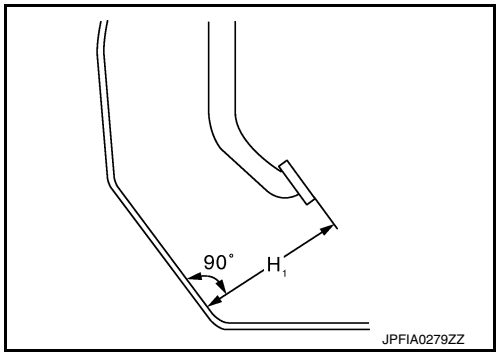

Stop Lamp Switch

1. Remove instrument lower panel LH. Refer to IP-24, "Removal and Installation".
2. Disconnect the harness connector from stop lamp switch.
3. Loosen the stop lamp switch 45° counterclockwise.
4. Press-fit the stop lamp switch (2) until the stop lamp switch hits the brake pedal (1) then tighten 45° clockwise while pulling the brake pedal pad slightly.
CAUTION:
- **The clearance (C) between the brake pedal and stop lamp switch threaded and must be the specified value.**

Clearance : **Refer to BR-44, "Brake Pedal".**

- **The stop lamp must turn off when the brake pedal is released.**

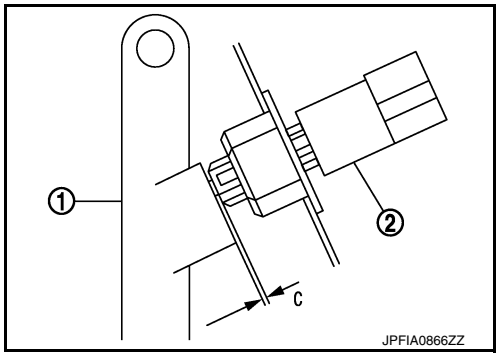

ASCD Cancel Switch (if equipped)

1. Remove instrument lower panel LH. Refer to IP-24, "Removal and Installation".
2. Disconnect the harness connector from ASCD cancel switch.
3. Loosen the ASCD cancel switch 45° counterclockwise.
4. Press-fit the ASCD cancel switch (2) until the ASCD cancel switch hits the brake pedal (1) then tighten 45° clockwise while pulling the brake pedal pad slightly.

   CAUTION:
   - **The clearance (C) between the brake pedal and ASCD cancel switch threaded and must be the specified value.**

     Clearance : Refer to BR-44, "Brake Pedal".
   - **The stop lamp must turn off when the brake pedal is released.**

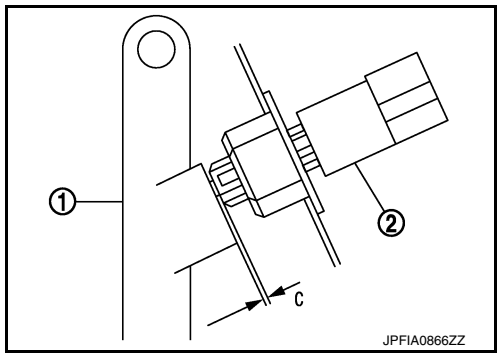

BRAKE FLUID

Inspection

INFOID:0000000009364820

BRAKE FLUID LEVEL

- Check that the fluid level in the reservoir tank is within the specified range between the MAX – MIN lines as shown.
- Visually check for any brake fluid leaks around the reservoir tank.
- Check the brake system for any leaks if the fluid level is extremely low (lower than MIN).
- Check the brake system for fluid leaks if the warning lamp remains illuminated even after the parking brake is released.
- Check the reservoir tank for the mixing of foreign matter (e.g. dust) and oils other than brake fluid.

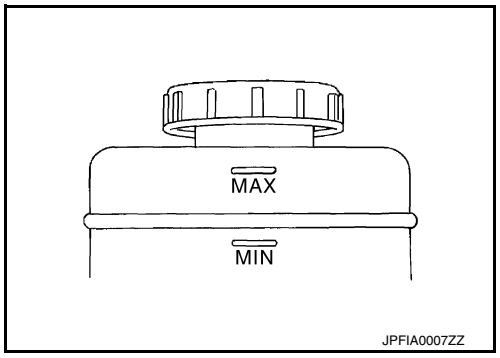

BRAKE LINE

1. Check brake tubes and hoses for cracks, deterioration or other damage. Replace any damaged parts.
2. Check for brake fluid leaks by fully depressing brake pedal while engine is running.
   CAUTION:
   Retighten the applicable connection to the specified torque and repair any abnormal (damaged, worn or deformed) part if any brake fluid leaks are present.

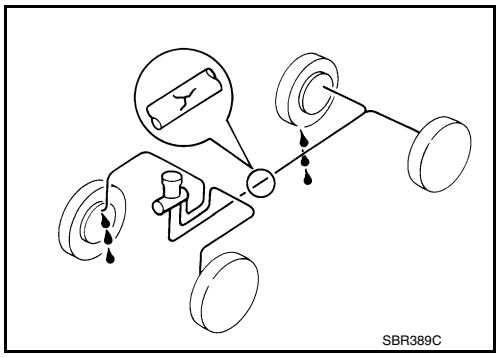

Draining

INFOID:0000000009364821

CAUTION:
- **Do not spill or splash brake fluid on painted surfaces. Brake fluid may seriously damage paint. Wipe it off immediately and wash with water if it gets on a painted surface.**
- **Turn the ignition switch OFF and disconnect ABS actuator and electric unit (control unit) or battery negative terminal before performing work.**

1. Connect a vinyl tube to the bleeder valve.
2. Depress the brake pedal and loosen the bleeder valve to gradually discharge brake fluid.

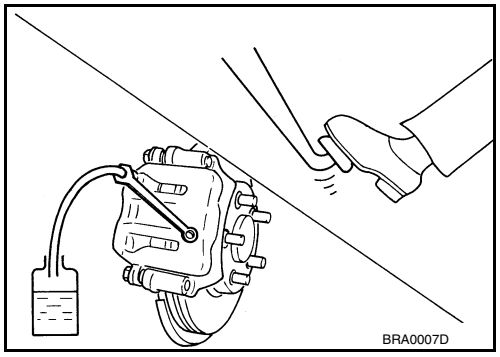

Refilling

INFOID:0000000009364822

CAUTION:
- **Turn the ignition switch OFF and disconnect ABS actuator and electric unit (control unit) or battery negative terminal before performing work.**
- **Do not spill or splash brake fluid on painted surfaces. Brake fluid may seriously damage paint. Wipe it off immediately and wash with water if it gets on a painted surface.**
- **Monitor the brake fluid level in the reservoir while performing the air bleeding procedure.**
- **Always use new brake fluid for refilling. Do not reuse drained brake fluid.**
- **Do not allow foreign matter (e.g. dust) and oils other than brake fluid to enter the reservoir tank.**

1. Check that there is no foreign material in the reservoir tank, and refill with new brake fluid. Refer to MA-11, "Fluids and Lubricants".
2. Loosen the bleeder valve, slowly depress the brake pedal to the full stroke, and then release the pedal. Repeat this operation at intervals of 2 or 3 seconds until new brake fluid is discharged. Then close the bleeder valve with the brake pedal depressed. Repeat the same work on each wheel.
3. Perform the air bleeding procedure. Refer to BR-12, "Bleeding Brake System".

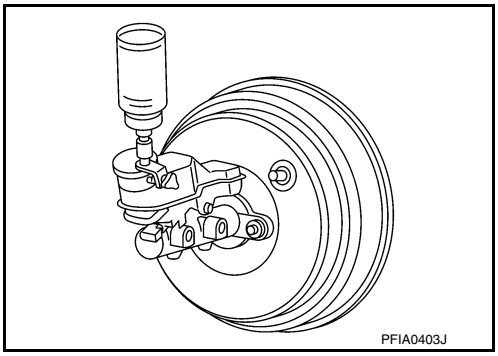

Bleeding Brake System

INFOID:0000000009364823

CAUTION:
- **Turn the ignition switch OFF and disconnect ABS actuator and electric unit (control unit) or battery negative terminal before performing the work.**
- **Monitor the fluid level in the reservoir tank while performing the air bleeding.**
- **Do not spill or splash brake fluid on painted surfaces. Brake fluid may seriously damage paint. Wipe it off immediately and wash with water if it gets on a painted surface.**
- **Always use new brake fluid for refilling. Do not reuse drained brake fluid.**
- **Do not allow foreign matter (e.g. dust) and oils other than brake fluid to enter the reservoir tank.**

1. Connect a vinyl tube to the bleeder valve.
2. Fully depress the brake pedal 4 to 5 times.
3. Loosen the bleeder valve and bleed air with the brake pedal depressed, and then quickly tighten the bleeder valve.
4. Repeat steps 2 and 3 until all of the air is out of the brake line.
5. Tighten the bleeder valve to the specified torque.
   - Front disc brake: Refer to BR-35, "BRAKE CALIPER ASSEMBLY : Exploded View".
   - Rear drum brake: Refer to BR-40, "Exploded View".
6. Perform steps 1 to 5 in the following order: Front (RH) brake → front (LH) brake → rear (RH) brake → rear (LH) brake.
7. Check that the fluid level in the reservoir tank is within the specified range after air bleeding. Refer to BR-11, "Inspection".
8. Add brake fluid as necessary to keep the brake fluid level within the specified range. Refer to MA-11, "Fluids and Lubricants".
9. Inspect the brake pedal height and play. Adjust it if the measurement value is not the standard. Refer to BR-8, "Inspection and Adjustment".

BRAKE MASTER CYLINDER

Inspection

INFOID:0000000009364824

FLUID LEAKS

Check for brake fluid leaks from the master cylinder, reservoir tank, and brake tube connections.

BRAKE BOOSTER

Inspection

INFOID:0000000009364825

OPERATION

Depress the brake pedal several times at 5-second intervals with the engine stopped. Start the engine with the brake pedal fully depressed. Check that the clearance between brake pedal and dash lower panel decreases.

NOTE:

A slight impact with a small click may be felt on the pedal when the brake pedal is fully depressed. This is a normal phenomenon due to the brake system operation.

AIR TIGHT

1. Run the engine at idle for 1 minute to apply vacuum to the brake booster, and stop the engine. Then depress the brake pedal several times at 5-second intervals until the accumulated vacuum is released to atmospheric pressure. Check that the clearance between brake pedal and dash lower panel gradually increases each time the brake pedal is depressed when performing this operation.
2. Depress the brake pedal with the engine running. Then stop the engine while holding down the brake pedal. Check that the brake pedal stroke does not change after holding down the brake pedal for 30 seconds or more.

FRONT DISC BRAKE

BRAKE PAD

BRAKE PAD : Inspection

INFOID:0000000009364826

INSPECTION

Check brake pad wear thickness from an inspection hole on cylinder body. Check using a scale if necessary.

Wear thickness : Refer to BR-44, "Front Disc Brake".

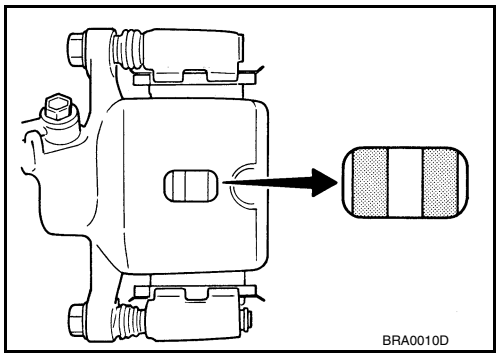

BRAKE PAD : Brake Burnishing

INFOID:0000000009671177

BRAKE BURNISHING

Burnish contact surfaces between disc brake rotor and brake pads according to the following procedure after refinishing disc brake rotors, replacing disc brake rotors, replacing brake pads, or if a soft pedal occurs at very low mileage:

CAUTION:

- **Be careful of vehicle speed because the brake pedal does not operate firmly/securely until pads and disc brake rotor are securely seated.**
- **Only perform this procedure under safe road and traffic conditions. Use extreme caution.**

1. Drive vehicle on straight, flat road.
2. Depress brake pedal with the power to stop vehicle within 3 to 5 seconds until the vehicle stops.
3. Drive without depressing brake pedal for a few minutes to cool the brakes.
4. Repeat steps 1 to 3 until pad and disc brake rotor are securely seated.

DISC ROTOR

DISC ROTOR : Inspection

INFOID:0000000009364827

INSPECTION

Appearance

Check surface of disc brake rotor for uneven wear, cracks, and serious damage. Replace it if necessary. Refer to BR-44, "Front Disc Brake".

Runout

1. Secure the disc brake rotor to the wheel hub with wheel nuts (2 points at least).
2. Check the wheel bearing axial end play before the inspection. Refer to FAX-7, "Inspection".
3. Inspect the runout with a dial indicator to measure at 10 mm (0.39 in) inside the disc edge.

Runout : Refer to BR-44, "Front Disc Brake".

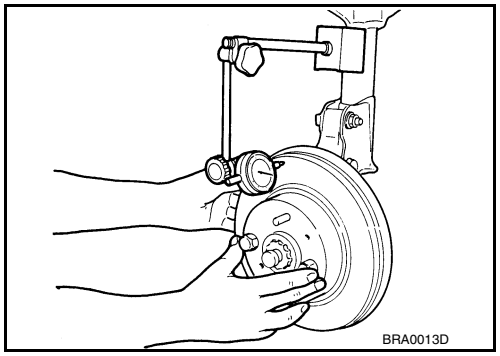

4. Find the installation position that has a minimum runout by shifting the disc brake rotor-to-wheel hub installation position by one hole at a time if the runout exceeds the limit value.
5. Refinish or replace the disc brake rotor if the runout is outside the limit even after performing the above operation.

CAUTION:
If the thickness is less than wear thickness + 0.3 mm (0.012 in), replace the disc brake rotor. Refer to BR-36, "BRAKE CALIPER ASSEMBLY : Removal and Installation".

Wear thickness : Refer to BR-44, "Front Disc Brake".

Thickness
Check the thickness of the disc brake rotor using a micrometer. Replace the disc brake rotor if the thickness is below the wear limit. Refer to BR-44, "Front Disc Brake".

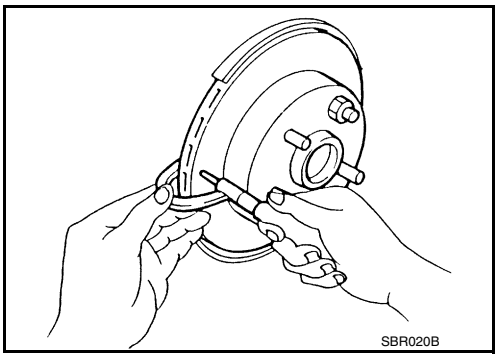

Wear thickness	**: Refer to BR-44, "Front Disc Brake".**
Thickness variation (measured at 8 positions)	**: Refer to BR-44, "Front Disc Brake".**

REAR DRUM BRAKE

BRAKE LINING

BRAKE LINING : Inspection

INFOID:0000000009364828

INSPECTION

Brake Lining

1. Remove plug from back plate. Refer to BR-40, "Exploded View".
2. Check brake lining wear thickness (A) from an inspection hole on back plate. Check using a scale if necessary.

Wear thickness : Refer to BR-45, "Rear Drum Brake".

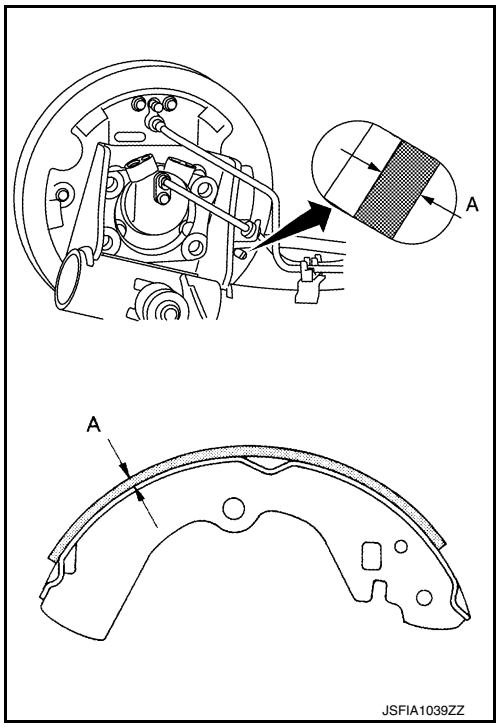

BRAKE LINING : Brake Burnishing

INFOID:0000000009671190

BRAKE BURNISHING

Burnish contact surfaces between brake lining and brake drum according to the following procedure after refinishing brake drum, replacing brake drum, replacing brake lining, or if a soft pedal occurs at very low mileage:

CAUTION:

- **Be careful of vehicle speed because the brake pedal does not operate firmly/securely until brake lining and brake drum are securely seated.**
- **Only perform this procedure under safe road and traffic conditions. Use extreme caution.**

1. Drive vehicle on straight, flat road.
2. Depress brake pedal with the power to stop vehicle within 3 to 5 seconds until the vehicle stops.
3. Drive without depressing brake pedal for a few minutes to cool the brake.
4. Repeat steps 1 to 3 until brake lining and brake drum are securely seated.

BRAKE DRUM

BRAKE DRUM : Inspection

INFOID:0000000009364829

INSPECTION

Appearance

Check surface of brake drum for uneven wear, cracks and serious damage. Replace it if necessary. Refer to RAX-6, "Removal and Installation".

NOTE:

- Make sure the parking brake control is fully released prior to removal of the brake drum.

- The rear wheel hub is part of the brake drum.

Brake Drum Inner Diameter
Check inner diameter (B) of the brake drum.

Inner diameter : Refer to BR-45, "Rear Drum Brake".

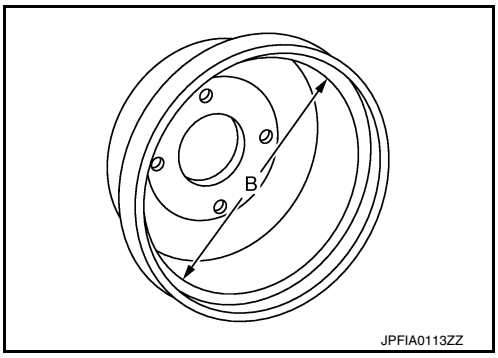

REMOVAL AND INSTALLATION

BRAKE PEDAL

Exploded View

INFOID:0000000009364830

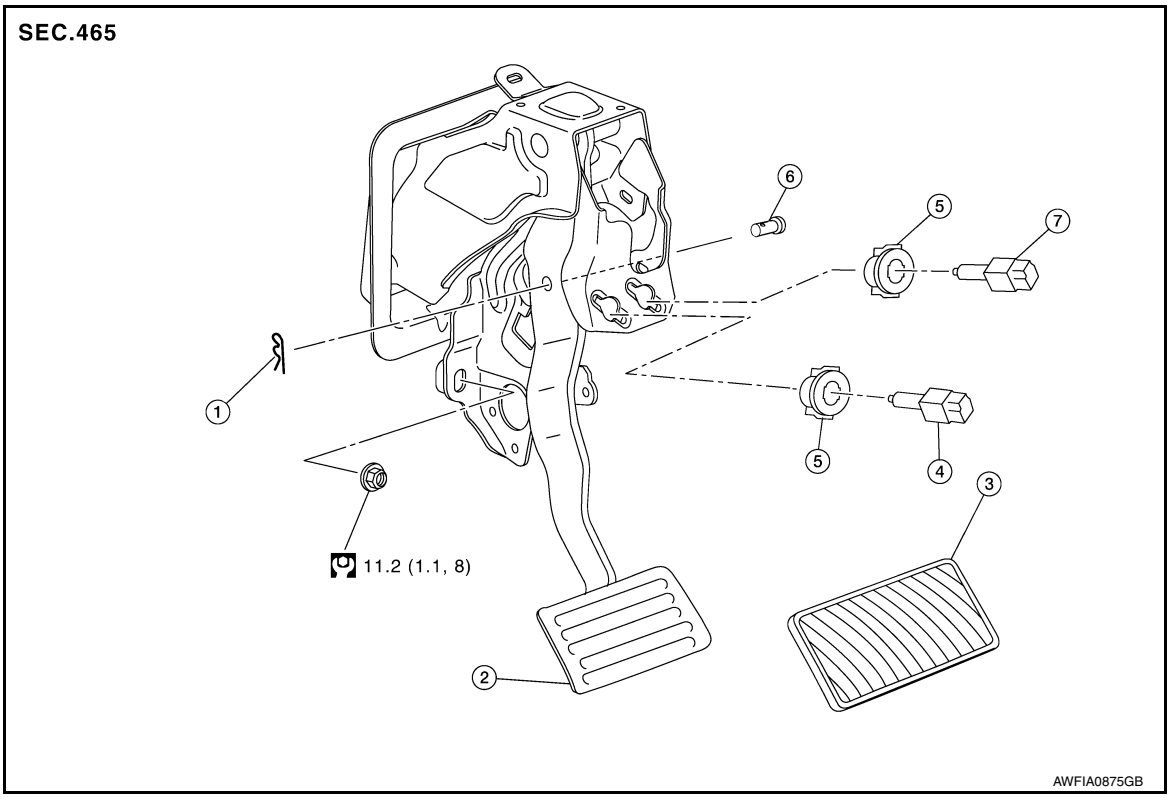

1. Snap pin
2. Brake pedal
3. Brake pedal pad
4. Stop lamp switch
5. Clip
6. Clevis pin
7. ASCD cancel switch (if equipped)

NOTE:
The CVT brake pedal is shown. The M/T brake pedal is similar.

Removal and Installation

INFOID:0000000009364831

REMOVAL

1. Remove instrument lower panel LH. Refer to IP-24, "Removal and Installation".
2. Remove knee bolster. Refer to IP-14, "Exploded View".
3. Disconnect the harness connector from the stop lamp switch.
4. Disconnect the harness connector from the ASCD cancel switch (if equipped).
5. Disconnect the harness connector from the accelerator pedal. Remove the accelerator pedal. Refer to ACC-3, "Removal and Installation".
6. Separate the harness from brake pedal.
7. Rotate the stop lamp switch counter clockwise to remove.
8. Rotate the ASCD cancel switch (if equipped) counter clockwise to remove.
9. Remove snap pin and clevis pin from clevis.
10. Disconnect the power steering harness connector and position it aside.
11. Remove the brake pedal.
    CAUTION:
    Support the brake booster and master cylinder to prevent contact with other components.

12. Perform the inspection after removal. Refer to BR-20, "Inspection and Adjustment".

INSTALLATION

Installation is in the reverse order of removal.

CAUTION:

Replace the brake pedal if it has been dropped or sustained an impact.

- Apply the multi-purpose grease to the clevis pin and the mating faces. (Not necessary if grease has been already applied)
  NOTE:
  The clevis pin may be inserted in either direction.
- Perform the adjustment after installation. Refer to BR-20, "Inspection and Adjustment".

Inspection and Adjustment

INFOID:0000000009364832

INSPECTION AFTER REMOVAL

- Check the brake pedal for damage and cracks on the welded parts, and replace the brake pedal if necessary.

ADJUSTMENT AFTER INSTALLATION

- Inspect the brake pedal height and play. Adjust it if the measurement value is not the standard. Refer to BR-8, "Inspection and Adjustment".
- Perform the accelerator pedal released position learning procedure. Refer to EC-126, "Work Procedure".

BRAKE PIPING

FRONT

FRONT : Exploded View

INFOID:0000000009364833

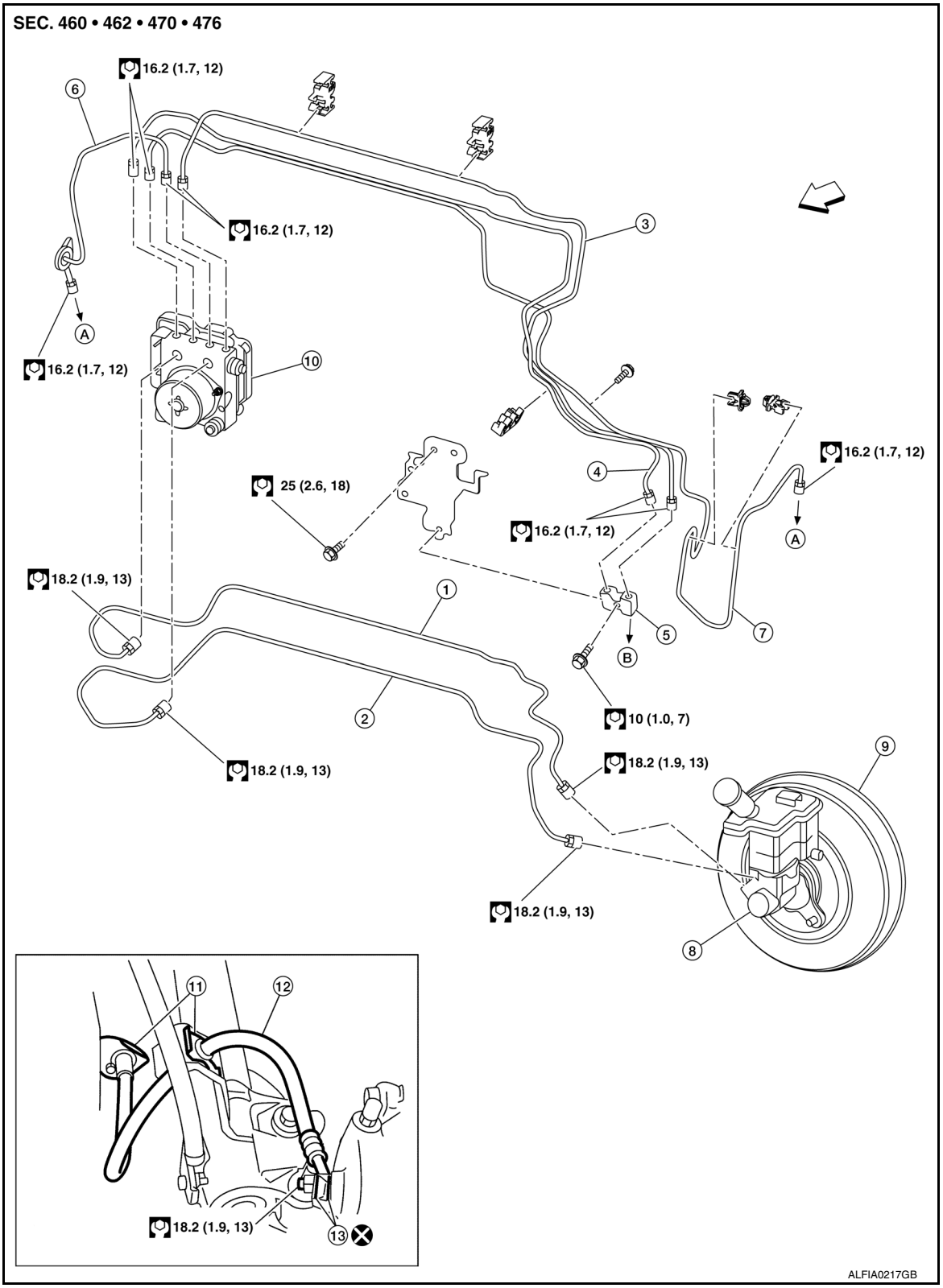

1.	Master cylinder brake tube (secondary)	2.	Master cylinder brake tube (primary)	3.	ABS actuator to brake tube connector (LH)
4.	ABS actuator to brake tube connector (RH)	5.	Brake tube connector	6.	Front brake tube (RH)
7.	Front brake tube (LH)	8.	Brake master cylinder	9.	Brake booster
10.	ABS actuator and electric unit (control unit)	11.	Lock plate	12.	Front brake hose
13.	Copper sealing washer	A.	To front brake hose	B.	To rear brake tube
⇦	Front				

FRONT : Hydraulic Piping

INFOID:0000000009364834

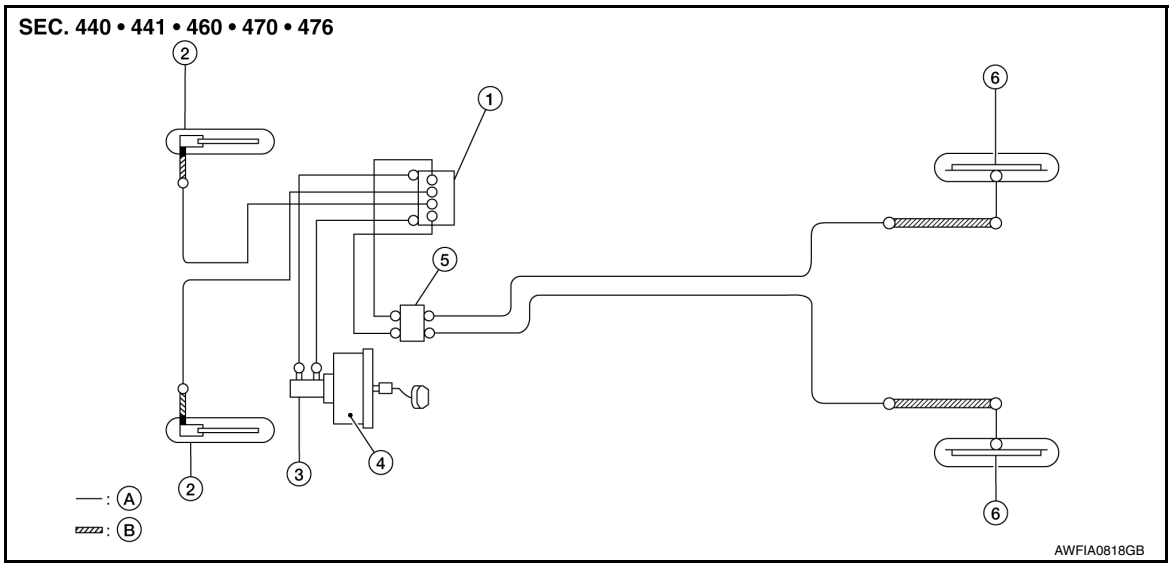

1.	ABS actuator and electric unit (control unit)	2.	Front disc brake	3.	Brake master cylinder
4.	Brake booster	5.	Brake tube connector	6.	Rear drum brake
A.	Brake tube	B.	Brake hose		
◯	Flare nut	■	Union bolt		

CAUTION:
- **All hoses and tubes must be free from excessive bending, twisting and pulling.**
- **Make sure there is no interference with other parts when turning steering clockwise and counter-clockwise.**
- **The brake system is an important safety system. If a brake fluid leak is detected, always disassemble the parts. Replace applicable part with a new one, if necessary.**
- **Do not bend or twist brake hose sharply, or strongly pull it.**
- **When removing components, cover connections so that no dirt, dust, or other foreign matter gets in.**
- **Do not reuse drained brake fluid.**

FRONT : Removal and Installation

INFOID:0000000009364835

CAUTION:
- **Do not spill or splash brake fluid on painted surfaces. Brake fluid may seriously damage paint. Wipe it off immediately and wash with water if it gets on a painted surface.**
- **Do not allow foreign matter (e.g. dust) and oils other than brake fluid to enter the sub tank.**

NOTE:
When removing components such as hoses, tubes/lines, etc., cap or plug openings to prevent fluid from spilling.

REMOVAL

1. Remove the wheel and tire using power tool.
2. Loosen the flare nut using a flare nut wrench and separate the brake tube from the hose, and remove the brake tube.
   CAUTION:
   - **Do not scratch the flare nut and the brake tube.**
   - **Do not bend sharply, twist or strongly pull out the brake hoses and tubes.**
3. Remove the union bolt, the copper sealing washers, and the brake hose from the brake caliper.
4. Remove the lock plate and brake hose.

INSTALLATION

1. Assemble the union bolt (A) and the copper sealing washers (1) to the brake hose and install it to the caliper. Align the brake hose L-pin with the brake caliper hole, and tighten the union bolt (A) to the specified torque. Refer to BR-21, "FRONT : Exploded View".
   CAUTION:
   Do not reuse copper sealing washers.

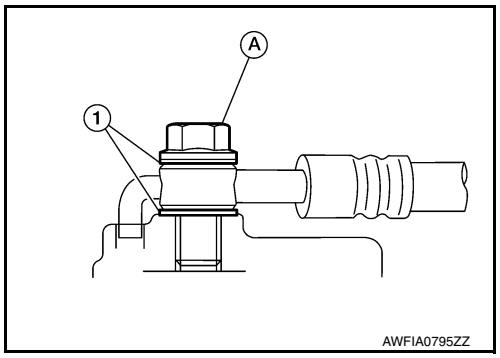

2. Install the brake tube to the brake hose, temporarily tighten the flare nut by hand until it does not rotate further, and secure the brake hose to the bracket with the lock plate.
   CAUTION:
   - **Check that all brake hoses and brake tubes are not excessively bent, kinked or twisted.**
   - **Make sure that interference does not exist between the brake hoses and other parts when turning the steering wheel clockwise and counterclockwise.**
3. Tighten the flare nut to the specified torque using a crowfoot and torque wrench.
   CAUTION:
   Do not scratch the flare nut and the brake tube.
4. Refill with new brake fluid and perform the air bleeding. Refer to BR-12, "Bleeding Brake System".
   CAUTION:
   Do not reuse drained brake fluid.
5. Install the wheel and tire. Refer to WT-45, "Exploded View".
6. Perform inspection after installation. Refer to BR-23, "FRONT : Inspection".

FRONT : Inspection

INFOID:0000000009364836

INSPECTION AFTER INSTALLATION

1. Check the brake hoses and tubes for the following: no scratches; no twist and deformation; no interference with other components when steering the steering wheel; no looseness at connections.
   CAUTION:
   Clearance with brake hose and each parts being secured more than 10 mm (0.39 in) in unladen condition*.
   ***: Fuel, engine coolant and lubricant are full. Spare tire, jack, hand tools and mats are in designated positions.**
2. Depress the brake pedal with a force of 785 N (80.1 kg-f, 176.5 lb-f) and hold down the brake pedal for approximately 5 seconds with the engine running. Check for any fluid leaks.
   CAUTION:
   Retighten the applicable connection to the specified torque and repair any abnormal (damaged, worn or deformed) part if any brake fluid leaks are present.

REAR

REAR : Exploded View

INFOID:0000000009364837

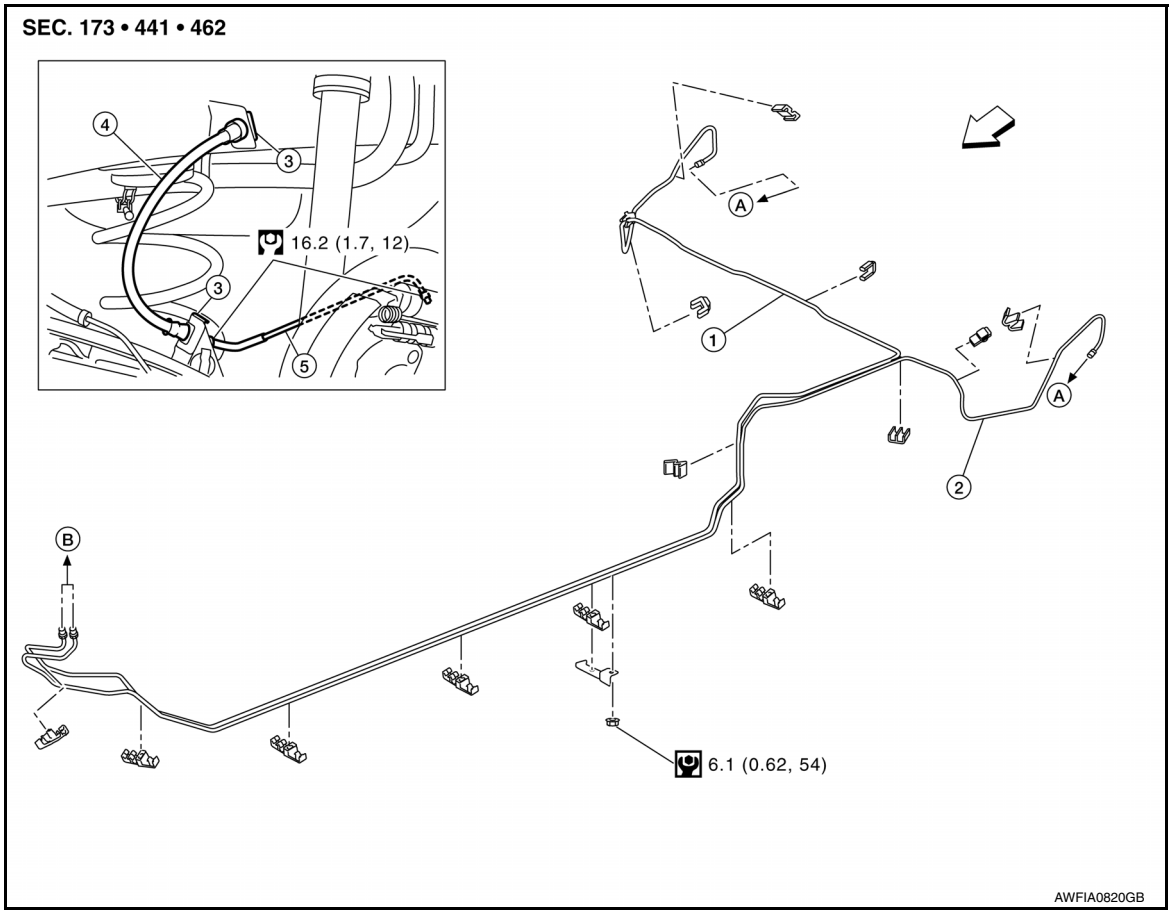

1. Rear brake tube (RH)
2. Rear brake tube (LH)
3. Lock plate
4. Rear brake hose
5. Wheel cylinder brake tube
A. To rear brake hose
B. To brake tube connector
⇦ Front

REAR : Hydraulic Piping

INFOID:0000000009364838

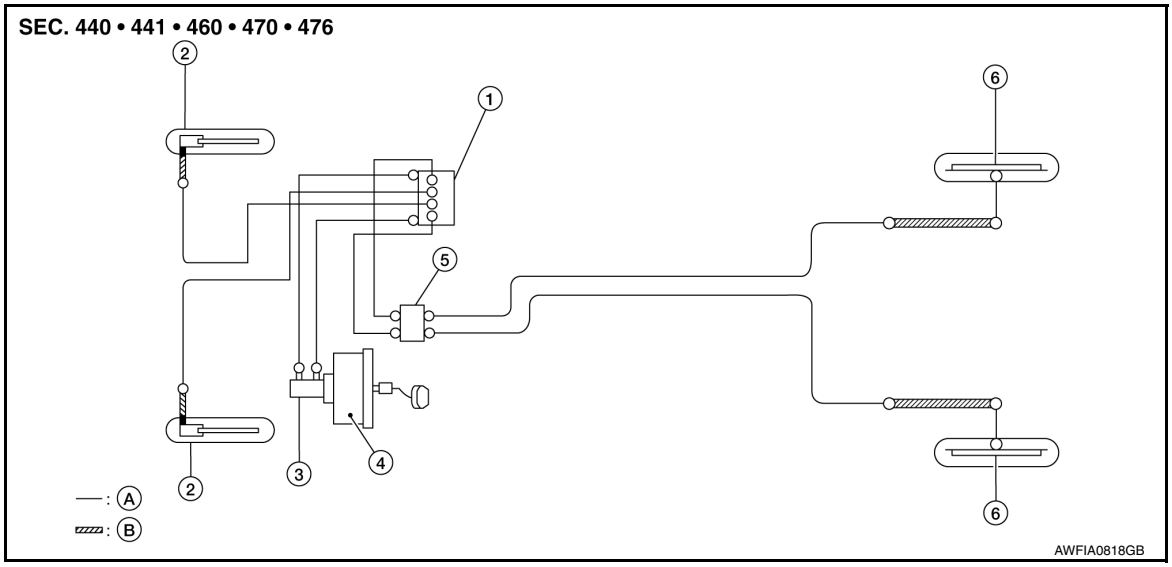

1.	ABS actuator and electric unit (control unit)	2.	Front disc brake	3.	Brake master cylinder
4.	Brake booster	5.	Brake tube connector	6.	Rear drum brake
A.	Brake tube	B.	Brake hose		
◯:	Flare nut	■	Union bolt		

CAUTION:
- **All hoses and tubes must be free from excessive bending, twisting and pulling.**
- **Make sure there is no interference with other parts when turning steering clockwise and counter-clockwise.**
- **The brake system is an important safety system. If a brake fluid leak is detected, always disassemble the parts. Replace applicable part with a new one, if necessary.**
- **Do not bend or twist brake hose sharply, or strongly pull it.**
- **When removing components, cover connections so that no dirt, dust, or other foreign matter gets in.**
- **Do not reuse drained brake fluid.**

REAR : Removal and Installation

INFOID:0000000009364839

CAUTION:
- **Do not spill or splash brake fluid on painted surfaces. Brake fluid may seriously damage paint. Wipe it off immediately and wash with water if it gets on a painted surface.**
- **Do not allow foreign matter (e.g. dust) and oils other than brake fluid to enter the reservoir tank.**

NOTE:
When removing components such as hoses, tubes/lines, etc., cap or plug openings to prevent fluid from spilling.

REMOVAL

1. Remove the wheel and tire using power tool.
2. Loosen the flare nut using a flare nut wrench and separate the brake tube from the brake hose.
   CAUTION:
   - **Do not scratch the flare nut or the brake tube.**
   - **Do not bend sharply, twist or strongly pull out the brake hoses and brake tubes.**
3. Remove the lock plate and remove the brake hose from the vehicle.
4. Loosen the flare nut using a flare nut wrench and separate the brake tube from the wheel cylinder. Remove the brake tube.

INSTALLATION

1. Connect the brake tube to the wheel cylinder. Temporarily tighten the flare nut by hand until it does not rotate further.
2. Connect the brake hose to the brake tube. Temporarily tighten the flare nut by hand until it does not rotate further. Secure the brake hose to the bracket with the lock plate.
   CAUTION:
   - **Check that all brake hoses and brake tubes are not excessively bent, kinked or twisted.**
   - **Make sure that interference does not exist between the brake hoses and other parts when the suspension moves.**
3. Tighten the flare nut to the specified torque using a crowfoot and torque wrench. Refer to BR-24, "REAR : Exploded View".
   CAUTION:
   Do not scratch the flare nut or the brake tube.
4. Refill with new brake fluid and perform the air bleeding. Refer to BR-12, "Bleeding Brake System".
   CAUTION:
   Do not reuse drained brake fluid.
5. Install the wheel and tire. Refer to WT-45, "Exploded View".
6. Perform inspection after installation. Refer to BR-25, "REAR : Inspection".

REAR : Inspection

INFOID:0000000009364840

INSPECTION AFTER INSTALLATION

1. Check the brake hoses and tubes for the following: no scratches; no twist and deformation; no looseness at connections.
   CAUTION:
   Clearance with brake hose and each parts being secured more than 10 mm (0.39 in) in unladen condition*.
   ***: Fuel, engine coolant and lubricant are full. Spare tire, jack, hand tools and mats are in designated positions.**
2. Depress the brake pedal with a force of 785 N (80.1 kg-f, 176.5 lb-f) and hold down the pedal for approximately 5 seconds with the engine running. Check for any fluid leaks.
   CAUTION:
   Retighten the applicable connection to the specified torque and repair any abnormal (damaged, worn or deformed) part if any brake fluid leaks are present.

BRAKE MASTER CYLINDER

Exploded View

INFOID:0000000009364841

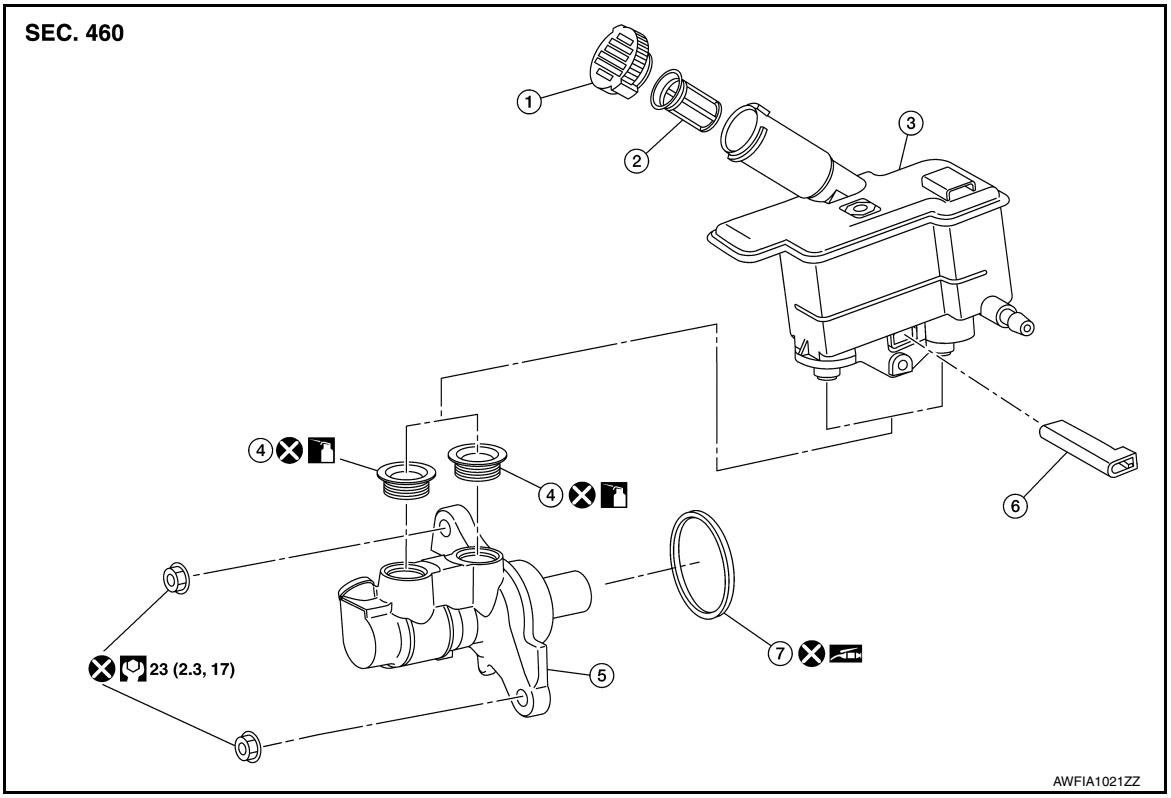

1.	Reservoir cap	2.	Brake fluid strainer	3.	Reservoir tank
4.	Grommet	5.	Brake master cylinder	6.	Brake fluid level switch
7.	O-ring		Apply brake fluid		PBC (Poly Butyl Cuprysil) grease or silicone-based grease

Removal and Installation

INFOID:0000000009364842

CAUTION:
- **Be careful not to splash brake fluid on painted areas; it may cause paint damage. If brake fluid is splashed on painted areas, wash it away with water immediately.**
- **Do not scratch the piston of brake master cylinder when installing/removing because the piston is exposed. Check for any dust on the piston, and wash with brake fluid if needed.**
- **Hold the brake master cylinder when handing the brake master cylinder. Do not hold the piston because the piston might become detached if pulled strongly.**

NOTE:
When removing components such as hoses, tubes/lines, etc., cap or plug openings to prevent fluid from spilling.

REMOVAL

1. Remove battery tray. Refer to PG-68, "Removal and Installation (Battery Tray)".
2. Remove air cleaner and air duct. Refer to EM-26, "Removal and Installation".
3. Position the IPDM E/R aside to obtain access to the brake master cylinder. Refer to PCS-31, "Removal and Installation" (WITH I-KEY), PCS-60, "Removal and Installation" (WITHOUT I-KEY).
4. Disconnect the harness connector from the brake fluid level switch.
5. Disconnect the brake tubes from the brake master cylinder using a flare nut wrench.
   CAUTION:
   Do not scratch the flare nut or the brake tubes.
6. Remove nuts and brake master cylinder.

CAUTION:
- **Do not bend sharply, twist, or strongly pull out the brake tubes.**
- **Do not depress the brake pedal after the brake master cylinder is removed.**
- **The piston of the brake master cylinder is exposed. Do not damage it when removing the brake master cylinder.**

7. Remove and discard the O-ring.

INSTALLATION

Installation is in the reverse order of removal.

CAUTION:
- **Do not reuse the seal.**
- **Do not reuse the O-ring.**
- **Check that no dirt and dust are present on the piston before installation. Clean it with new brake fluid if necessary.**
- **Check that all brake tubes are not excessively bent, kinked or twisted.**
- **Do not allow foreign matter (e.g. dust) and oils other than brake fluid to enter the sub tank and reservoir tank.**
- Apply silicone grease to the brake booster (A) as shown when installing the brake master cylinder to the brake booster.

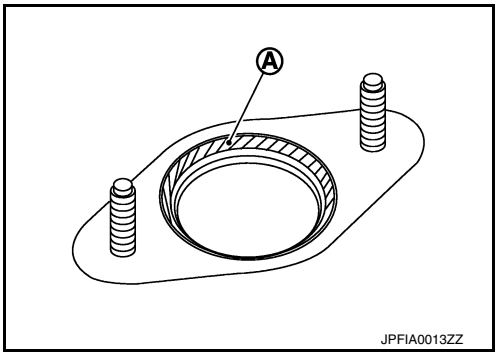

- Temporarily tighten the brake tube flare nut to the brake master cylinder by hand. Then tighten it to the specified torque using a crowfoot and torque wrench. Refer to BR-21, "FRONT : Exploded View".
  CAUTION:
  Do not scratch the flare nut or the brake tubes.
- After installation, perform the air bleeding. Refer to BR-12, "Bleeding Brake System".
  CAUTION:
  Do not reuse drained brake fluid.
- Perform the inspection after installation. Refer to BR-28, "Inspection".

Disassembly and Assembly

INFOID:0000000009364843

DISASSEMBLY

CAUTION:
- **Do not disassemble the brake master cylinder.**
- **Remove the reservoir tank only when necessary.**

Remove the reservoir tank and grommets from the brake master cylinder.

ASSEMBLY

CAUTION:
- **Do not use mineral oils such as kerosene or gasoline and rubber grease during the cleaning and assembly process.**
- **Do not drop the parts. The parts must not be reused if they are dropped.**
- **Do not allow foreign matter (e.g. dust) and oils other than brake fluid to enter the reservoir tank.**

1. Apply new brake fluid to the grommets and install on brake master cylinder.
   CAUTION:
   Do not reuse the grommets.
2. Install the reservoir tank to the brake master cylinder.

Inspection

INFOID:0000000009364844

INSPECTION BEFORE REMOVAL

Check the brake fluid level switch. Refer to BR-13, "Inspection".

INSPECTION AFTER INSTALLATION

Check the following items and replace if necessary.

- Check the brake master cylinder for deformation, twist, contact with other parts or looseness of connection.
- Check for fluid leaks from connections. Refer to BR-23, "FRONT : Inspection".

CAUTION:

If fluid leaks are present, retighten connections to the specified torque. Refer to BR-21, "FRONT : Exploded View". Replace components if necessary.

BRAKE BOOSTER AND CHECK VALVE

Exploded View

INFOID:0000000009364845

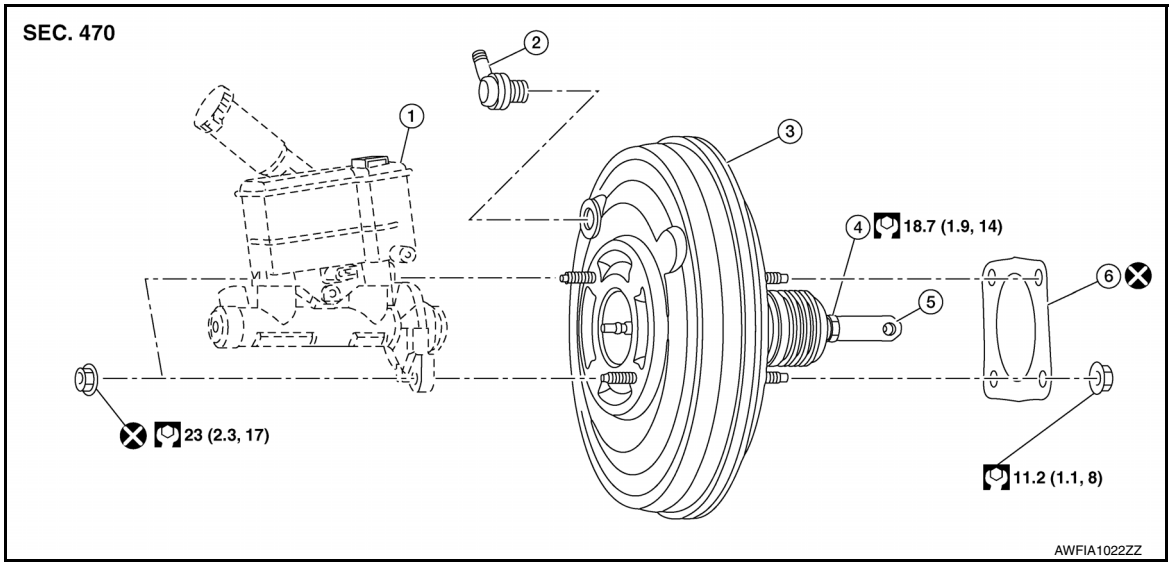

1. Brake master cylinder
2. Check valve
3. Brake booster
4. Lock nut
5. Clevis
6. Gasket

Removal and installation

INFOID:0000000009364846

CAUTION:
Do not spill or splash brake fluid on painted surfaces. Brake fluid may seriously damage paint. Wipe it off immediately and wash with water if it gets on a painted surface.

REMOVAL

1. Remove brake master cylinder. Refer to BR-27, "Removal and Installation".
2. Remove battery tray. Refer to PG-67, "Exploded View".
3. Remove ECM. Refer to EC-465, "Removal and Installation".
4. Remove TCM (if equipped). Refer to TM-237, "Removal and Installation".
5. Remove vacuum hose from check valve. Refer to BR-32, "Exploded View".
6. Remove instrument lower panel LH. Refer to IP-24, "Removal and Installation".
7. Remove knee bolster. Refer to IP-14, "Exploded View".
8. Remove the snap pin (1) and clevis pin (2). Refer to BR-19, "Exploded View".
9. Remove nuts on brake booster and brake pedal. Refer to BR-19, "Exploded View".
10. Remove brake booster from dash panel on engine room side.
    CAUTION:
    Do not deform or bend the brake tubes.
    NOTE:
    If removing brake booster is difficult, remove clevis from brake booster.
11. Remove check valve from brake booster.
12. Perform inspection after removal. Refer to BR-31, "Inspection and Adjustment".

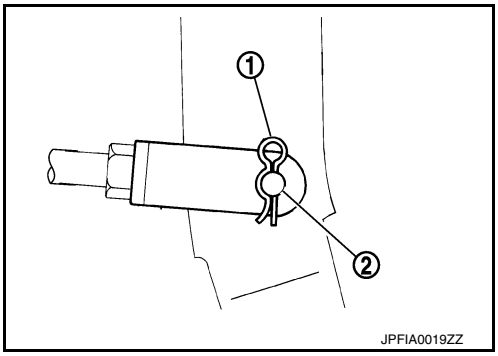

INSTALLATION

CAUTION:
- **Do not reuse drained brake fluid.**
- **Do not reuse the gasket.**

- **Be careful not to damage brake booster stud bolt threads. If brake booster is tilted during installation, the dash panel may damage the threads.**
- **Check that all brake tubes are not excessively bent, kinked or twisted.**
- **Do not allow foreign matter (e.g. dust) and oils other than brake fluid to enter the reservoir tank.**

Installation is in the reverse order of removal.

- Set check valve angle (A) as shown.

Check valve angle : 45°

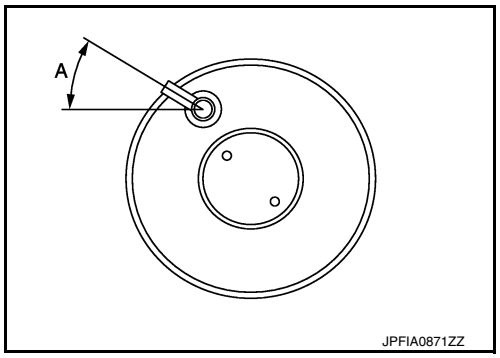

- After installation, perform the air bleeding. Refer to BR-12, "Bleeding Brake System".

CAUTION:
Do not reuse drained brake fluid.

- Perform the inspection after installation. Adjust the brake pedal height and play if necessary. Refer to BR-31, "Inspection and Adjustment".

Inspection and Adjustment

INFOID:0000000009364847

INSPECTION AFTER REMOVAL

Check Valve Vacuum Inspection

1. Check the vacuum using a suitable tool.

When connected to the booster side : Refer to BR-44, "Check Valve".
When connected to the vacuum hose side : Refer to BR-44, "Check Valve".

2. If the vacuum still cannot be maintained, replace the check valve.

Input Rod Length Inspection

1. Loosen the lock nut (1) and adjust the input rod (2) to the specified length (A).

Input rod length : Refer to BR-44, "Brake Booster".

2. Tighten the lock nut to the specified torque. Refer to BR-30, "Exploded View".

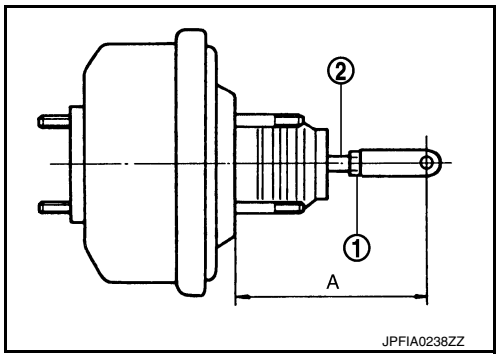

INSPECTION AFTER INSTALLATION

Inspect the brake booster operation. Refer to BR-14, "Inspection".

ADJUSTMENT AFTER INSTALLATION

Inspect the brake pedal height and play. Adjust it if the measurement is not the standard. Refer to BR-8, "Inspection and Adjustment".

VACUUM LINES

Exploded View

INFOID:0000000009364848

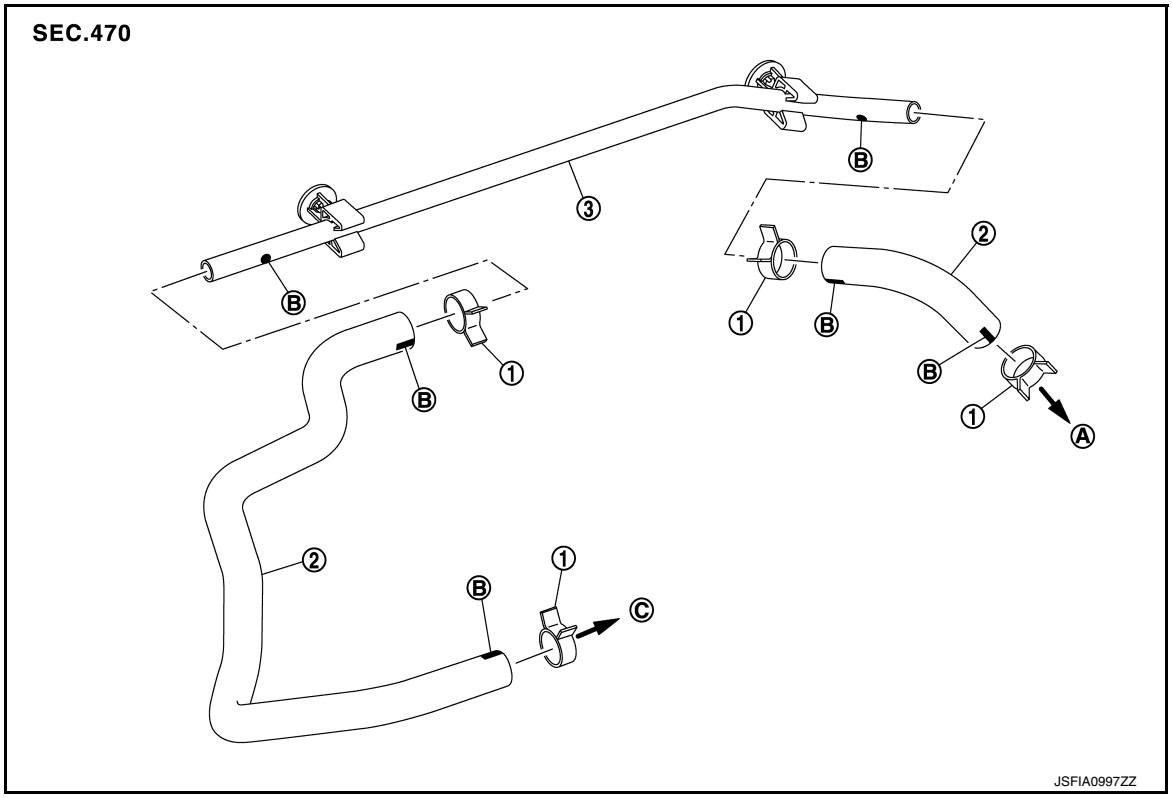

1.	Clamp	2.	Vacuum hose	3.	Vacuum piping
A.	To brake booster	B.	Paint mark	C.	To intake manifold

Removal and Installation

INFOID:0000000009364849

REMOVAL

1. Remove the air cleaner and air duct. Refer to EM-26, "Removal and Installation".
2. Remove the vacuum hose and vacuum piping.

INSTALLATION

Installation is in the reverse order of removal.

- When installing vacuum hose, insert until tip reaches the back-end of length (A) or further as shown.
  CAUTION:
  Do not use lubricating oil during assembly.

  Length : 24 mm (0.94 in) or more

- Face the paint mark of vacuum hose (intake manifold side) upward to assemble.
- Face the other paint marks of vacuum hose to the vehicle front side to assemble.

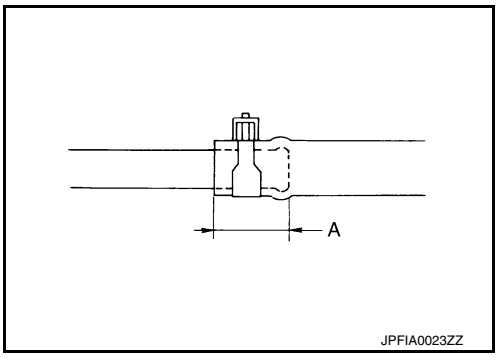

Inspection

INFOID:0000000009364850

INSPECTION AFTER REMOVAL

Appearance

Check for correct assembly, damage and deterioration.

FRONT DISC BRAKE

BRAKE PAD

BRAKE PAD : Exploded View

INFOID:0000000009364851

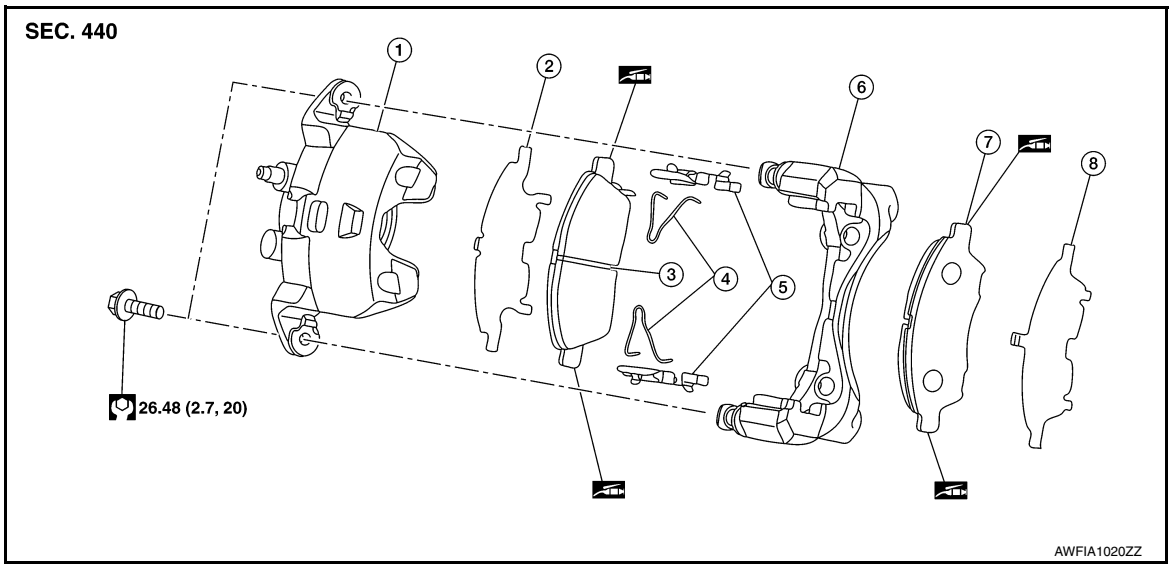

1. Cylinder body
2. Inner shim
3. Inner pad (with pad wear sensor)
4. Pad return spring
5. Pad retainer
6. Torque member
7. Outer pad
8. Outer shim

Apply MOLYKOTE® 7439 or equivalent.

BRAKE PAD : Removal and Installation

INFOID:0000000009364852

WARNING:
Clean any dust from the front brake and rear brake with a vacuum dust collector. Do not blow with compressed air.

CAUTION:
- **While removing caliper, do not depress the brake pedal because the piston will pop out.**
- **It is not necessary to remove bolts on torque member and brake hose except for disassembly or replacement of front disc brake caliper. In this case, hang front disc brake caliper with a wire so as not to stretch brake hose.**
- **Do not damage piston boot.**
- **Keep disc brake rotor and brake pads free from brake fluid and grease.**

REMOVAL

1. Remove the front wheel and tire using power tool.
2. Remove sliding pin bolts.
3. Suspend the cylinder body with suitable wire in a position so that the brake hose will not stretch. Then remove the pad return springs, brake pads, shims and pad retainers from the torque member.
   CAUTION:
   - **Do not deform the pad return springs or pad retainers when servicing the brake pads.**
   - **Note the position of the brake pads during removal to aid installation.**
4. Perform inspection after removal. Refer to BR-35, "BRAKE PAD : Inspection".

INSTALLATION

1. Install the pad retainers to the torque member.
   CAUTION:
   - **Install the pad retainers so that they will not be lifted up from the torque member.**
   - **Do not deform the pad retainers.**

2. Apply MOLYKOTE® 7439 or equivalent to the to the mating surfaces between the shims and the brake pads.
3. Install the brake pads and shims to the torque member.
   CAUTION:
   - **Replace the brake pads and shims if they have been dropped or sustained and impact.**
   - **If any shim is damaged by corrosion, replace it.**
   - **Always replace shims and brake pads as a set.**
4. Install the pad return springs to the brake pads.
   CAUTION:
   - **Do not deform the pad return springs.**
   - **Correctly insert the pad return spring into the pad return spring hole on the brake pad.**
5. Install cylinder body to torque member.
   CAUTION:
   When installing new brake pads, check the brake fluid level in the reservoir tank because brake fluid returns to the reservoir tank when pressing piston in.
   NOTE:
   Use a disc brake piston tool to press piston into the cylinder body.
6. Install the sliding pin bolts and tighten to the specified torque. Refer to BR-34, "BRAKE PAD : Exploded View".
7. Depress the brake pedal several times to verify that brake drag does not exist for the front disc brake. Refer to BR-35, "BRAKE PAD : Inspection".
8. Install the front wheel and tire. Refer to WT-45, "Exploded View".
9. Perform the inspection after installation. Refer to BR-35, "BRAKE PAD : Inspection".

BRAKE PAD : Inspection

INFOID:0000000009364853

INSPECTION AFTER REMOVAL

If any shim is subject to serious corrosion, replace it with a new one.

INSPECTION AFTER INSTALLATION

1. Check drag of front disc brake. If any drag is found, follow the procedure described below:
   a. Remove brake pads. Refer to BR-34, "BRAKE PAD : Removal and Installation".
   b. Press the piston.
   c. Install brake pads. Refer to BR-34, "BRAKE PAD : Removal and Installation".
   d. Securely depress the brake pedal several times.
   e. Check drag of front disc brake again. If any drag is found, disassemble the cylinder body and replace if necessary. Refer to BR-37, "BRAKE CALIPER ASSEMBLY : Disassembly and Assembly".
2. Burnish the brake pads and disc brake rotor mutually contacting surfaces, after refinishing or replacing disc brake rotors, after replacing brake pads, or if a soft pedal occurs at very low mileage. Refer to BR-15, "BRAKE PAD : Brake Burnishing".

BRAKE CALIPER ASSEMBLY

BRAKE CALIPER ASSEMBLY : Exploded View

INFOID:0000000009364854

REMOVAL

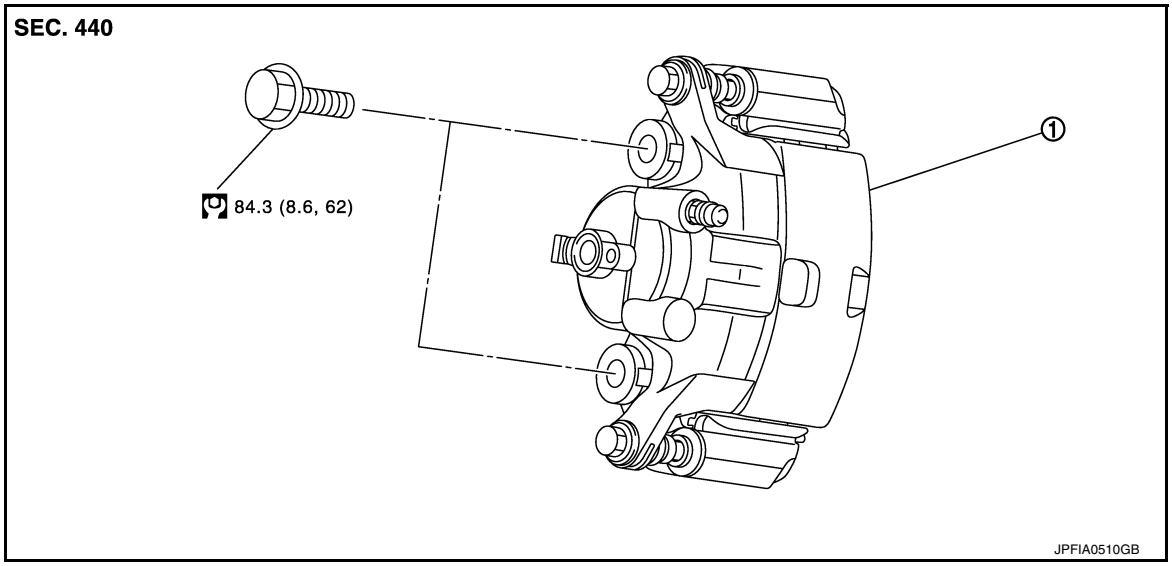

1. Brake caliper

BRAKE CALIPER ASSEMBLY : Removal and Installation

INFOID:0000000009364855

WARNING:
Clean any dust from the brake caliper and brake pads with a vacuum dust collector. Do not blow with compressed air.
CAUTION:
- **While removing caliper, do not depress the brake pedal because the piston will pop out.**
- **Do not damage piston boot.**
- **Do not allow foreign matter (e.g. dust) and oils other than brake fluid to enter the reservoir tank.**
- **Do not spill or splash brake fluid on painted surfaces. Brake fluid may seriously damage paint. Wipe off immediately and wash with water if brake fluid spills on painted surfaces.**
- **Keep disc brake rotor free from brake fluid.**
- **Do not reuse drained brake fluid.**

NOTE:
When removing components such as hoses, tubes/lines, etc., cap or plug openings to prevent fluid from spilling.

REMOVAL

1. Remove the front wheel and tire using power tool.
2. Remove union bolt and disconnect brake hose from brake caliper. Discard the copper sealing washers.
3. Remove bolts and torque member including brake caliper.
4. Remove disc brake rotor. If reusing the disc brake rotor, apply matching marks on the wheel hub and disc brake rotor to aid installation.
   CAUTION:
   Put matching marks on the wheel hub and disc brake rotor, if it is necessary to remove disc brake rotor.

INSTALLATION

1. Install disc brake rotor, align the matching marks if installing the original disc brake rotor.
   CAUTION:
   - **Replace the disc brake rotor if it has been dropped or sustained an impact.**
   - **Align the marks on disc brake rotor and wheel hub at the time of installation when reusing disc brake rotor.**
2. Install the torque member including brake caliper to the steering knuckle and tighten the torque member bolts to the specified torque. Refer to BR-35, "BRAKE CALIPER ASSEMBLY : Exploded View".
   CAUTION:
   - **Replace the torque member if it has been dropped or sustained an impact.**

- **Do not allow oil or any moisture on all contact surfaces between steering knuckle and torque member, and bolts.**

3. Install brake hose to brake caliper with new copper sealing washers (1). Tighten union bolt (A) to the specified torque. Refer to BR-21, "FRONT : Exploded View".
   CAUTION:
   - **Do not reuse copper sealing washers.**

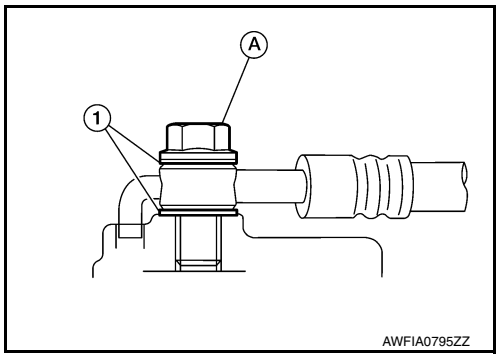

4. Refill reservoir tank with new brake fluid and bleed air from the brake hydraulic system. Refer to BR-12, "Bleeding Brake System".
5. Install the front wheel and tire. Refer to WT-45, "Exploded View".
6. Perform the inspection after installation. Refer to BR-35, "BRAKE PAD : Inspection".

BRAKE CALIPER ASSEMBLY : Disassembly and Assembly

INFOID:0000000009364856

DISASSEMBLY

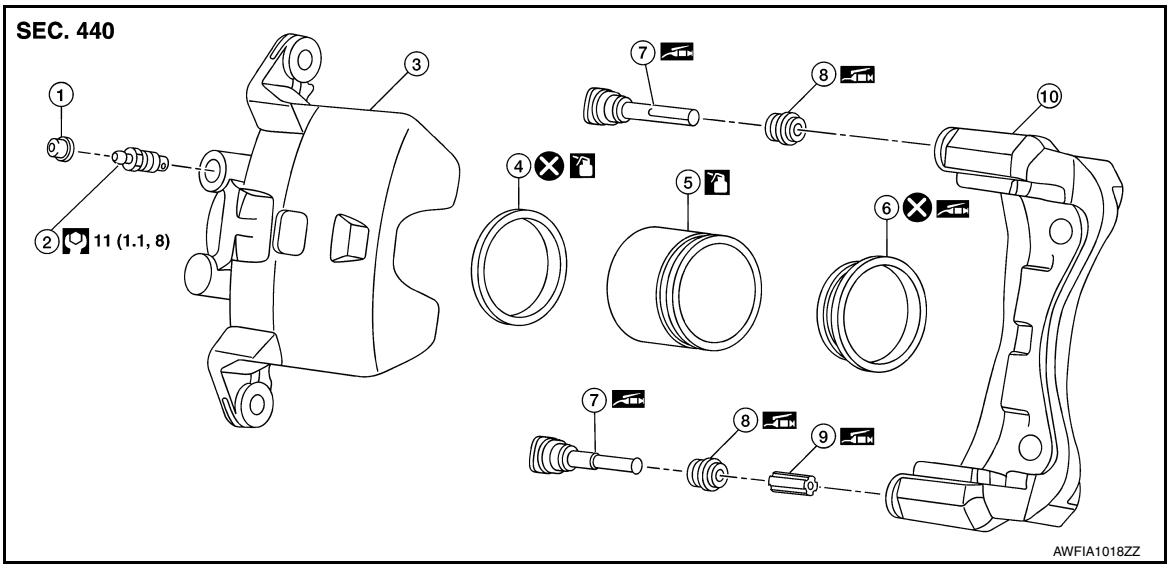

1.	Cap	2.	Bleeder valve	3.	Cylinder body
4.	Piston seal	5.	Piston	6.	Piston boot
7.	Sliding pin	8.	Sliding pin boot	9.	Bushing
10.	Torque member		Apply Syntheso® GLK 1 grease or equivalent.		Apply clean brake fluid

WARNING:
Clean dust on brake caliper and brake pad with a vacuum dust collector to minimize the hazard of airborne particles or other materials.
CAUTION:
- **While removing brake caliper, do not depress brake pedal because piston will pop out.**
- **Do not damage the piston boot.**

NOTE:
- The front brake caliper (LH) is shown. The front brake caliper (RH) is similar.
- Do not remove the pad return springs, brake pads, and pad retainers from the torque member when disassembling and assembling the brake caliper.

DISASSEMBLY

1. Remove the sliding pin bolts and the cylinder body from the torque member.
2. Remove the sliding pins and the sliding pin boots.
3. Remove the bushing from the sliding pin.
4. Place a wooden block as shown, and blow air from union bolt mounting hole to remove piston and piston boot.

   WARNING:
   Do not get fingers caught between the piston and wooden block.

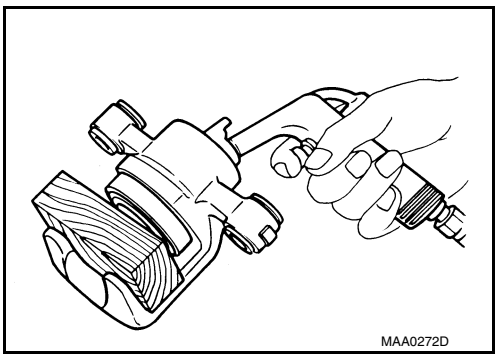

5. Remove piston seal from cylinder body using suitable tool.
   CAUTION:
   Be careful not to damage cylinder inner wall.
6. Remove bleeder valve and cap.
7. Perform inspection after disassembly.

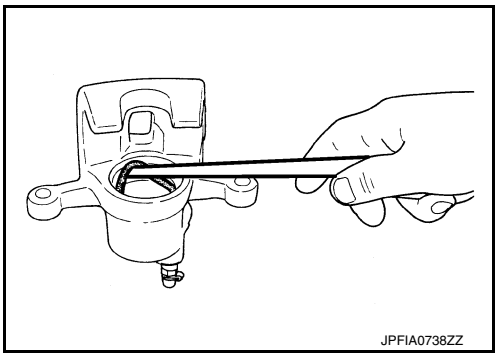

INSPECTION AFTER DISASSEMBLY

Brake Caliper
Check the inner wall of brake caliper for corrosion, wear, and damage. Replace as necessary.
CAUTION:
Clean the brake caliper using new brake fluid. Do not use mineral oils such as gasoline or kerosene.

Torque Member
Check torque member for wear, cracks, and damage. Replace as necessary.

Piston
Check the piston surface for corrosion, wear, and damage. Replace as necessary.
CAUTION:
The piston sliding surface is plated. Do not polish with sandpaper.

Sliding Pins, Sliding Pin Bolts, Sliding Pin Boot
Check the sliding pins, sliding pin bolts, and sliding pin boots for wear, damage, and cracks. Replace as necessary.

ASSEMBLY

1. Install bleeder valve and cap.
2. Apply clean brake fluid to new piston seal (1), and install to groove in cylinder body.
   CAUTION:
   Do not reuse piston seal.

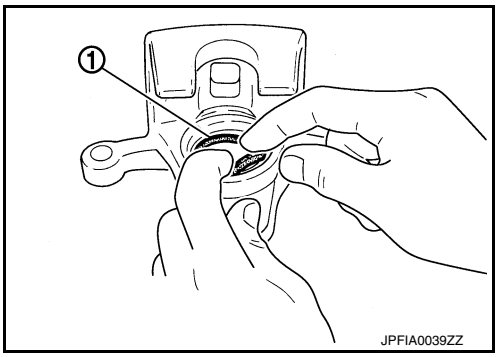

3. Apply Syntheso® GLK 1 grease or equivalent to piston boot (1). Cover the piston (2) end with new piston boot, and then install cylinder side lip on piston boot securely into a groove on cylinder body.
CAUTION:
Do not reuse piston boot.

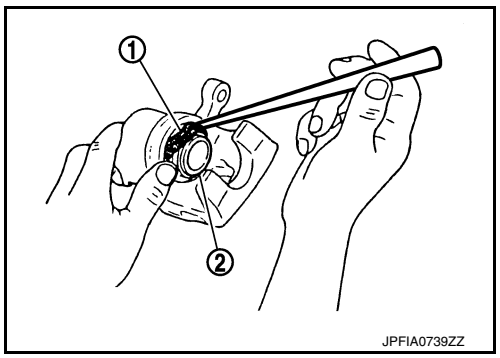

4. Push piston (1) into cylinder body by hand and push piston boot (2) piston-side lip into the piston groove.
CAUTION:
Press the piston evenly and vary the pressing point to prevent cylinder inner wall from being rubbed.

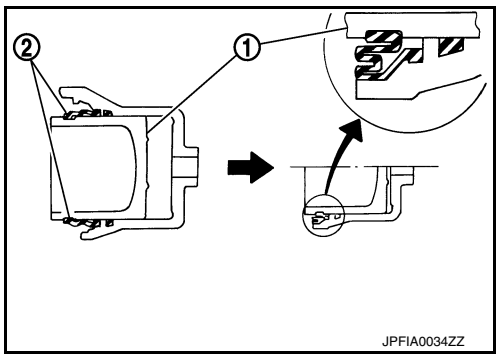

5. Apply rubber grease to the mating surfaces (A) of the sliding pin (1) and the bushing (2).
6. Install the bushing to the sliding pin.

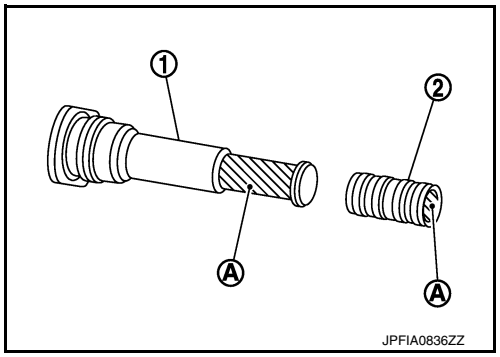

7. Apply rubber grease to the mating surfaces of the sliding pins (1) and the sliding pin boots (2).
8. Install the sliding pins and sliding pin boots to the torque member (3).

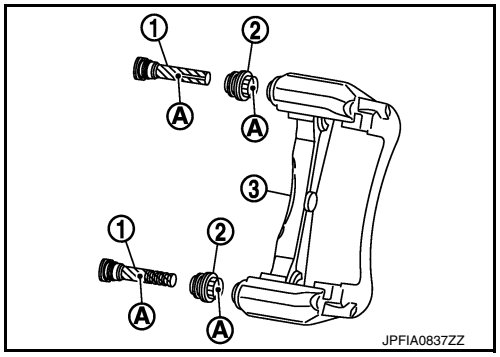

9. Install the cylinder body to the torque member with the sliding pin bolts. Refer to BR-35, "BRAKE CALIPER ASSEMBLY : Exploded View".

REAR DRUM BRAKE

Exploded View

INFOID:0000000009364857

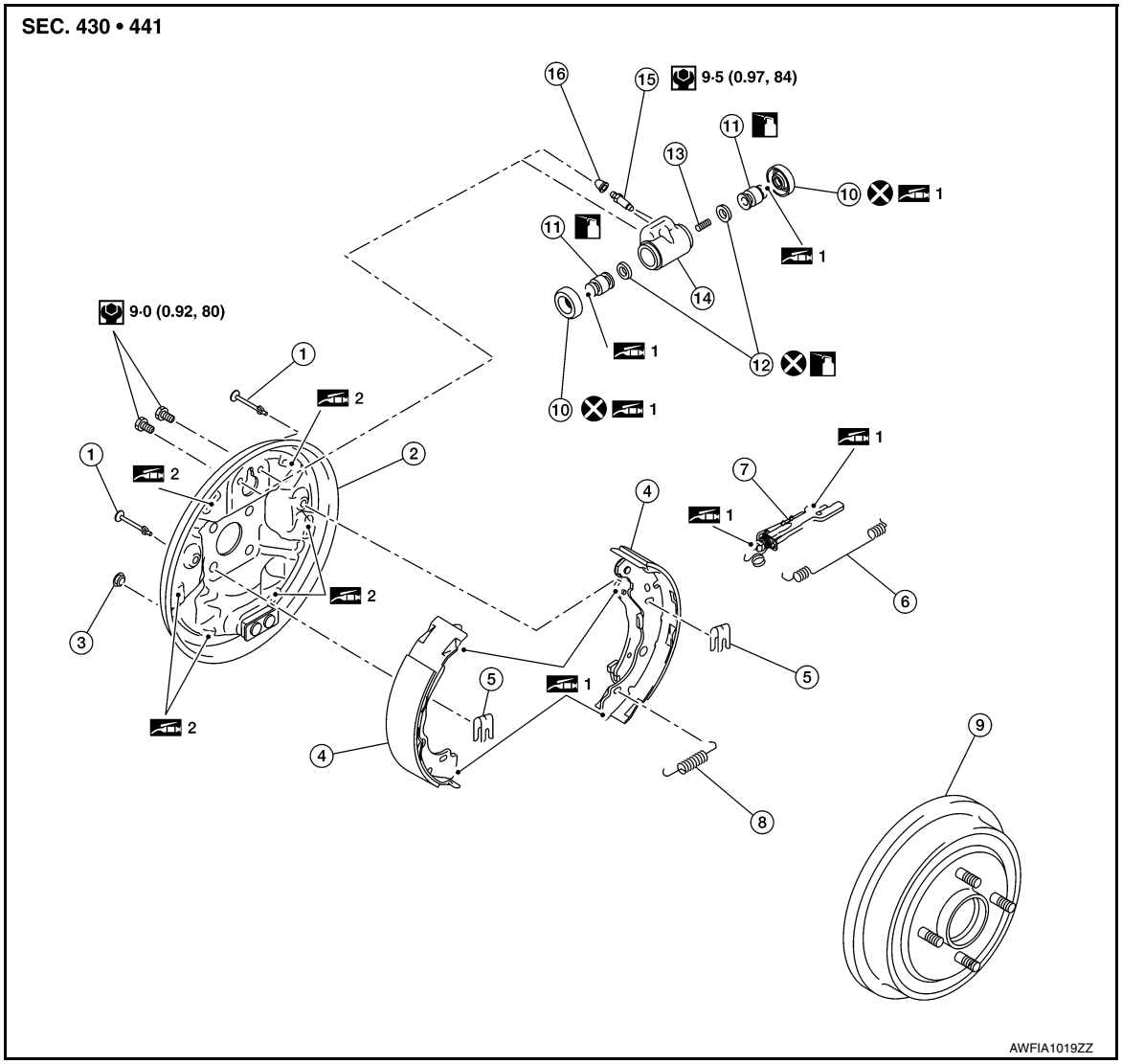

1.	Shoe hold pin	2.	Back plate	3.	Plug
4.	Brake shoe	5.	Retainer	6.	Upper spring
7.	Adjuster	8.	Return spring	9.	Brake drum
10.	Boot	11.	Piston	12.	Piston cup
13.	Spring	14.	Wheel cylinder	15.	Bleeder valve
16.	Cap				

1: Apply Syntheso® GLEP1 grease or equivalent.

2: Apply Molyguard GS 2039 grease or equivalent.

: Apply clean brake fluid

Removal and Installation

INFOID:0000000009364858

WARNING:

Clean any dust from the front brake and rear brake with a vacuum dust collector. Do not blow with compressed air.

CAUTION:

- **Do not depress the brake pedal while removing the brake drum because the pistons may pop out.**

- **Do not drop the removed parts.**
- **Do not spill or splash brake fluid on the brake drum.**

NOTE:
When removing components such as hoses, tubes/lines, etc., cap or plug openings to prevent fluid from spilling.

REMOVAL

1. Remove the wheel and tire using power tool. Refer to WT-45, "Exploded View".
2. Remove the brake drum. Refer to RAX-6, "Removal and Installation".
   NOTE:
   - Make sure the parking brake is fully released prior to removal of the brake drum.
   - The rear wheel hub is part of the brake drum.
3. Remove the retainers (1) by pushing them inward toward the vehicle and rotating. This will release the shoe hold pins, brake shoes, each retainer, and adjuster.
   CAUTION:
   Do not damage the wheel cylinder boots.
4. Disconnect the parking brake cable from operating lever.
   CAUTION:
   Do not bend the operating lever.

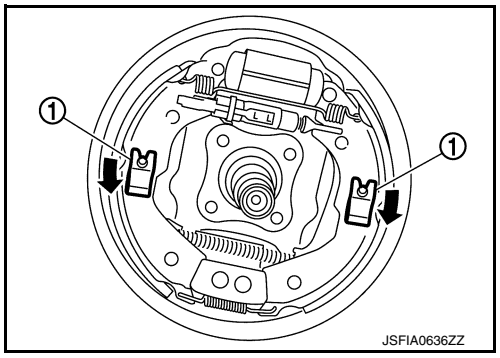

5. Disassemble the brake shoes, each spring, and adjuster.
6. Remove the wheel cylinder using the following procedure:
   a. Disconnect the brake tube from the wheel cylinder.
   b. Remove the two bolts and wheel cylinder from back plate.
7. Perform inspection after removal. Refer to BR-42, "Inspection and Adjustment".

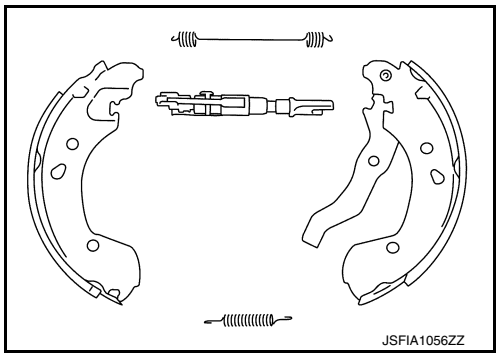

INSTALLATION

CAUTION:
- **Replace the parts if they have been dropped or sustained an impact.**
- **Do not damage the wheel cylinder.**
- **Do not allow foreign matter (e.g. dust) and oils other than brake fluid to enter the reservoir tank.**

Installation is in the reverse of removal.
- Check the difference between left and right adjuster.
  ⇦: Front

Adjuster	Direction
Left side	Left screw
Right side	Right screw

- Shorten the length of the adjuster by rotating it.
- For grease type and placement, refer to BR-40, "Exploded View".

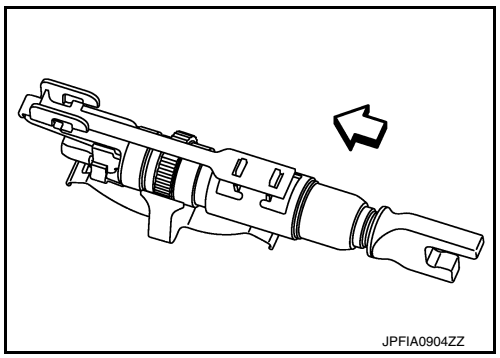

- Check drum brake components for proper installation.
- Check the brake shoe linings and brake drum inner surface for grease. Make sure that grease does not contact the lining material or drum inner surface.
- Perform the air bleeding after installing a new or rebuilt wheel cylinder. Refer to BR-12, "Bleeding Brake System".
- Step on the brake pedal several times after installing the brake drum.
- Perform the inspection after installation. Refer to BR-42, "Inspection and Adjustment".

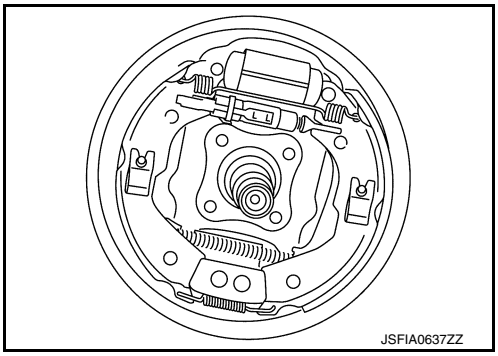

Disassembly and Assembly

INFOID:0000000009364859

DISASSEMBLY

1. Remove boots from wheel cylinder. Refer to BR-40, "Exploded View".
2. Remove pistons, piston cups and spring from wheel cylinder.
   CAUTION:
   Pull the pistons out from the wheel cylinder to prevent the wheel cylinder inner wall from being damaged.
3. Remove piston cups from pistons.
4. Perform inspection after disassembly. Refer to BR-42, "Inspection and Adjustment".

ASSEMBLY

1. Apply clean brake fluid to the new piston cups (1) and pistons (3).
2. Apply Syntheso® GLEP1 grease or equivalent to boots (2).
3. Install piston cups and new boots to pistons (3).
   CAUTION:
   - **Do not mistake the direction of pistons.**
   - **Do not reuse piston cups and boots.**
4. Apply clean brake fluid to wheel cylinder inner wall, and install spring and pistons into wheel cylinder.
   CAUTION:
   Do not damage the wheel cylinder inner wall.
5. Install boots to wheel cylinder. Refer to BR-40, "Exploded View".
6. Perform inspection after assembly. Refer to BR-42, "Inspection and Adjustment".

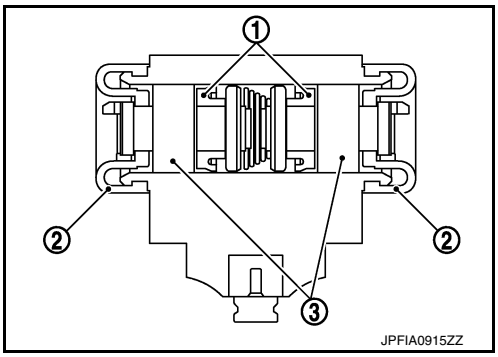

Inspection and Adjustment

INFOID:0000000009364860

INSPECTION AFTER REMOVAL

Check the following items and replace if necessary.
- Check the brake shoe lining for excessive wear, damage, and peeling.
- Check each spring for settling, excessive wear, damage, and rust.
- Check the adjuster for smoothness, and check it for excessive wear, damage, and rust.
- Check the back plate for damage, cracks, and deformation.
- Check the wheel cylinder for cracks, damage, and leaks.
- Visually check the brake drum for excessive wear, cracks, and damage.

INSPECTION AFTER DISASSEMBLY

Check the following items and replace if necessary.
- Check the wheel cylinder inner wall for excessive wear, cracks, and damage.
- Check the pistons for excessive wear and damage.

INSPECTION AFTER ASSEMBLY

Check that the pistons move smoothly.

INSPECTION AFTER INSTALLATION

1. Check that the drum brake component parts are installed properly.

2. Rotate the brake drum and check that there is no drag. Perform the following procedure if necessary:
   a. Remove the brake shoes. Refer to BR-40, "Removal and Installation".
   b. Push the pistons.
      CAUTION:
      Push both side of the piston simultaneously.
   c. Install the brake shoes. Refer to BR-40, "Removal and Installation".
3. Inspect and adjust the parking brake. Refer to PB-4, "Inspection and Adjustment".
4. Check drag of rear drum brake again. If any drag is found, disassemble the wheel cylinder and replace if necessary. Refer to BR-42, "Disassembly and Assembly".
5. Perform brake burnishing. Refer to BR-17, "BRAKE LINING : Brake Burnishing".

SERVICE DATA AND SPECIFICATIONS (SDS)

SERVICE DATA AND SPECIFICATIONS (SDS)

General Specifications

INFOID:0000000009364861

Unit: mm (in)

Front brake	Cylinder bore diameter	54.025 (2.13)
	Pad length × width × thickness	115.0 × 42.0 × 9.0 (4.53 × 1.654 × 0.354)
	Rotor outer diameter × thickness	260 × 22.0 (10.24 × 0.87)
Rear brake	Cylinder bore diameter	19.05 (3/4)
	Lining length × width × thickness	Trailing: 172 × 37 × 4.8 (6.77 × 1.46 × 0.19) Leading: 155 × 37 × 4.8 (6.10 ×1.46 × 0.19)
	Drum inner diameter - new	203.2 (8.00)
Master cylinder	Cylinder bore diameter	22.23 (0.875)
Control valve	Valve type	Electric brake force distribution
Brake booster	Diaphragm diameter	255 (10)
Recommended brake fluid		Refer to MA-11, "Fluids and Lubricants".

Brake Pedal

INFOID:0000000009364862

Unit: mm (in)

Item	Standard
Brake pedal height	158 ±5 (6.22 ±0.20)
Clearance between brake pedal lever and the stop lamp switch threaded end	0.2 – 1.96 (0.008 – 0.077)
Brake pedal full stroke	128 (5.04)

Check Valve

INFOID:0000000009641741

Vacuum applied at intake manifold side.	0 kPa (0 mmHg, 0 inHg)
Vacuum leakage [at vacuum of -66.7 kPa (-500 mmHg, -19.69 inHg) applied at booster side.]	Within 1.3 kPa (10 mmHg, 0.39 inHg) of vacuum for 15 seconds.

Brake Booster

INFOID:0000000009364863

Unit: mm (in)

Item	Standard
Input rod length	125 (4.92)

Front Disc Brake

INFOID:0000000009364864

Unit: mm (in)

Item		Limit
Brake pad	Wear thickness	2.0 (0.08)
Disc rotor	Wear thickness	20.0 (0.787)
	Thickness variation (measured at 8 positions)	0.013 (0.001)
	Runout (with it attached to the vehicle)	0.055 (0.002)

Rear Drum Brake

INFOID:0000000009364865

Unit: mm (in)

Item		Limit
Brake lining	Wear thickness	1.0 (0.04)
Brake drum	Wear inner diameter- maximum	204.2 (8.04)